JVC

SERVICE MANUAL

DIGITAL VIDEO CAMERA

GR-D70EK,GR-D70EX, GR-D70EY,GR-D70EZ

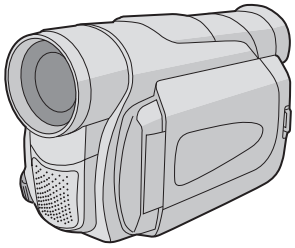

Mini DV PAL

DSC DIGITAL STILL CAMERA

For disassembling and assembling of MECHANISM ASSEMBLY, refer to the SERVICE MANUAL No.86700 (MECHANISM ASSEMBLY).

SPECIFICATION

Camcorder

General

Power supply	: DC 11.0 V ⎓ (Using AC Adapter) DC 7.2 V ⎓ (Using battery pack)
Power consumption	
LCD monitor off, viewfinder on	: Approx. 3.4 W
LCD monitor on, viewfinder off	: Approx. 4.7 W
Dimensions (W x H x D)	: 69 mm x 94 mm x 143 mm (with the LCD monitor closed and the viewfinder pushed back in)
Weight	: Approx. 525 g
Operating temperature	: 0°C to 40°C
Operating humidity	: 35% to 80%
Storage temperature	: -20°C to 50°C
Pickup	: 1/6" CCD
Lens	: F 1.6, f = 2.7 mm to 43.2 mm, 16:1 power zoom lens
Filter diameter	: Ø37 mm
LCD monitor	: 2.5" diagonally measured, LCD panel/TFT active matrix system
Viewfinder	: Electronic viewfinder with 0.24" black/white LCD
Speaker	: Monaural

Digital Video Camera

Format	: DV format (SD mode)
Signal format	: PAL standard
Recording/Playback format	: Video: Digital component recording : Audio: PCM digital recording, 32 kHz 4-channel (12-bit), 48 kHz 2-channel (16-bit)
Cassette	: Mini DV cassette
Tape speed	: SP : 18.8 mm/s LP : 12.5 mm/s
Maximum recording time (using 80 min. cassette)	: SP : 80 min. LP : 120 min.

Digital Still Camera Function

Storage media	: SD Memory Card/MultiMediaCard
Compression system	: JPEG (compatible)
File size	: 2 modes (1024 x 768 pixels, 640 x 480 pixels)
Picture quality	: 2 modes (FINE/STANDARD)
Approximate number of storable images	: pg. 18.

Connectors

S-Video	
Output	: Y : 1 V (p-p), 75 Ω, analogue C : 0.29 V (p-p), 75 Ω, analogue
Input*	: Y : 0.8 V (p-p) -1.2 V (p-p), 75 Ω, analogue C : 0.2 V (p-p) -0.4 V (p-p), 75 Ω, analogue
AV	
Video output	: 1 V (p-p), 75 Ω, analogue
Video input*	: 0.8 V (p-p) -1.2 V (p-p), 75 Ω, analogue
Audio output	: 300 mV (rms), 1 kΩ, analogue, stereo
Audio input*	: 300 mV (rms), 50 kΩ, analogue, stereo
DV	
Output	: 4-pin, IEEE 1394 compliant
Input	: 4-pin, IEEE 1394 compliant
USB*	: 5-pin
EDIT	: Ø3.5 mm, 2-pole

* GR-D70 only

AC Adapter

Power requirement	: AC 110 V to 240 V ~, 50 Hz/60 Hz
Output	: DC 11 V ⎓, 1 A

Specifications shown are for SP mode unless otherwise indicated. E & O.E. Design and specifications subject to change without notice.

GR-D70EK,GR-D70EX,GR-D70EY,GR-D70EZ M3D127

COPYRIGHT © 2003 VICTOR COMPANY OF JAPAN, LTD.

No.86733
2003/04

TABLE OF CONTENTS

1 PRECAUTIONS 1-3
1.1 SAFTY PRECAUTIONS 1-3
2 SPECIFIC SERVICE INSTRUCTIONS 1-5
2.1 BEFORE ASSEMBLY AND DISASSEMBLY 1-5
2.2 ASSEMBLY AND DISASSEMBLY OF CABINET PARTS. 1-6
2.3 ASSEMBLY AND DISASSEMBLY OF CAMERA SECTION AND BOARD ASSEMBLY 1-10
2.4 ASSEMBLY AND DISASSEMBLY OF [8]VF ASSEMBLY 1-12
2.5 ASSEMBLY AND DISASSEMBLY OF [10]MONITOR ASSEMBLY (CABINET PARTS) 1-13
2.6 ASSEMBLY AND DISASSEMBLY OF [2]OP BLOCK ASSEMBLY / CCD BOARD ASSEMBLY (CAMERA SECTION AND BOARD ASSEMBLY) 1-15
2.7 SERVICE NOTE 1-16
2.8 TAKE OUT CASSETTE TAPE 1-17
2.9 EMERGENCY DISPLAY 1-18
3 ADJUSTMENT 1-19
3.1 PREPARATION. 1-19
3.2 TOOLS REQUIRED FOR ADJUSTMENT 1-19
3.3 JIG CONNECTOR CABLE 1-21
3.4 MECHANISM ADJUSTMENT 1-22
3.5 ELECTRICAL ADJUSTMENT 1-23
CHARTS AND DIAGRAMS
BOARD INTERCONNECTIONS. 2-3
MAIN IF SCHEMATIC DIAGRAM 2-5
CPU SCHEMATIC DIAGRAM 2-7
AUDIO_AD SCHEMATIC DIAGRAM 2-9
AUDIO SCHEMATIC DIAGRAM 2-11
DV_MAIN SCHEMATIC DIAGRAM 2-13
VIDEO I/O SCHEMATIC DIAGRAM 2-15
CAMERA DSP SCHEMATIC DIAGRAM 2-17
OP DRIVER SCHEMATIC DIAGRAM 2-19
TG SCHEMATIC DIAGRAM 2-21
USB SCHEMATIC DIAGRAM 2-22
REG SCHEMATIC DIAGRAM 2-23
DSC SCHEMATIC DIAGRAM 2-25
MONI-BW SCHEMATIC DIAGRAM 2-27
BL-2.5/BL-3.5 SCHEMATIC DIAGRAM 2-29
CCD SCHEMATIC DIAGRAM 2-30
MDA SCHEMATIC DIAGRAM 2-31
PRE/REC SCHEMATIC DIAGRAM 2-33
PREMDA IF SCHEMATIC DIAGRAM 2-35
JACK SCHEMATIC DIAGRAM. 2-36
B/W-VF SCHEMATIC DIAGRAM 2-37
ZOOM UNIT SCHEMATIC DIAGRAM 2-38
MAIN CIRCUIT BOARD 2-39
COMPONENT PARTS LOCATION GUIDE <MAIN> 2-43
COMPONENT PARTS LOCATION GUIDE <PREMDA> 2-44
PREMDA CIRCUIT BOARD 2-45
MONI-BW CIRCUIT BOARD 2-49
BL-2.5 CIRCUIT BOARD 2-50
JACK CIRCUIT BOARD 2-51
CCD CIRCUIT BOARD. 2-52
B/W-VF CIRCUIT BOARD 2-52
VIDEO BLOCK DIAGRAM 2-54
POWER SYSTEM BLOCK DIAGRAM 2-57
VOLTAGE CHARTS 2-59
PARTS LIST
1. EXPLODED VIEW. 3-1
1.1 PACKING AND ACCESSORY ASSEMBLY <M1> 3-1
1.2 FINAL ASSEMBLY <M2> 3-2
1.3 MECHANISM ASSEMBLY <M3> 3-4
1.4 ELECTRONIC VIEWFINDER ASSEMBLY <M4> 3-5
1.5 MONITOR ASSEMBLY (2.5 INCH) <M5>. 3-6
1.6 MONITOR ASSEMBLY (3.5 INCH) <M5>. 3-7

MODEL NUMBER	GR-D70EK	GR-D70EX	GR-D70EY	GR-D70EZ
POWER CORD	BS TYPE	CEE TYPE	CEE TYPE	CEE TYPE

SECTION 1
PRECAUTIONS

1.1 SAFTY PRECAUTIONS

Prior to shipment from the factory, JVC products are strictly inspected to conform with the recognized product safety and electrical codes of the countries in which they are to be sold.However,in order to maintain such compliance, it is equally important to implement the following precautions when a set is being serviced.

1.1.1 Precautions during Servicing

(1) Locations requiring special caution are denoted by labels and inscriptions on the cabinet, chassis and certain parts of the product.When performing service, be sure to read and comply with these and other cautionary notices appearing in the operation and service manuals.

(2) Parts identified by the ⚠symbol and shaded ( ) parts are critical for safety.
Replace only with specified part numbers.
NOTE :
Parts in this category also include those specified to comply with X-ray emission standards for products using cathode ray tubes and those specified for compliance with various regulations regarding spurious radiation emission.

(3) Fuse replacement caution notice.
Caution for continued protection against fire hazard.
Replace only with same type and rated fuse(s) as specified.

(4) Use specified internal wiring. Note especially:
- Wires covered with PVC tubing
- Double insulated wires
- High voltage leads

(5) Use specified insulating materials for hazardous live parts. Note especially:
- Insulation Tape
- PVC tubing
- Spacers
- Insulation sheets for transistors
- Barrier

(6) When replacing AC primary side components (transformers, power cords, noise blocking capacitors, etc.) wrap ends of wires securely about the terminals before soldering.

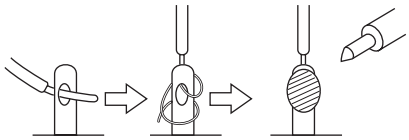

Fig.1-1-1

(7) Observe that wires do not contact heat producing parts (heatsinks, oxide metal film resistors, fusible resistors, etc.)

(8) Check that replaced wires do not contact sharp edged or pointed parts.

(9) When a power cord has been replaced, check that 10-15 kg of force in any direction will not loosen it.

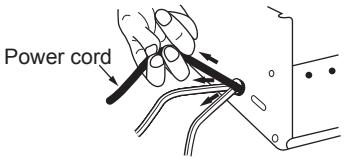

Fig.1-1-2

(10) Also check areas surrounding repaired locations.

(11) Products using cathode ray tubes (CRTs)In regard to such products, the cathode ray tubes themselves, the high voltage circuits, and related circuits are specified for compliance with recognized codes pertaining to X-ray emission. Consequently, when servicing these products, replace the cathode ray tubes and other parts with only the specified parts. Under no circumstances attempt to modify these circuits.Unauthorized modification can increase the high voltage value and cause X-ray emission from the cathode ray tube.

(12) Crimp type wire connector
In such cases as when replacing the power transformer in sets where the connections between the power cord and power trans former primary lead wires are performed using crimp type connectors, if replacing the connectors is unavoidable, in order to prevent safety hazards, perform carefully and precisely according to the following steps.
- **Connector part number** :E03830-001
- **Required tool** : Connector crimping tool of the proper type which will not damage insulated parts.
- **Replacement procedure**
  a) Remove the old connector by cutting the wires at a point close to the connector.
  Important : Do not reuse a connector (discard it).

Fig.1-1-3

  b) Strip about 15 mm of the insulation from the ends of the wires. If the wires are stranded, twist the strands to avoid frayed conductors.

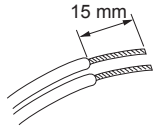

Fig.1-1-4

  c) Align the lengths of the wires to be connected. Insert the wires fully into the connector.

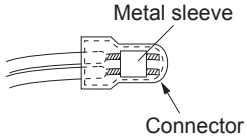

Fig.1-1-5

  d) As shown in Fig.1-1-6, use the crimping tool to crimp the metal sleeve at the center position. Be sure to crimp fully to the complete closure of the tool.

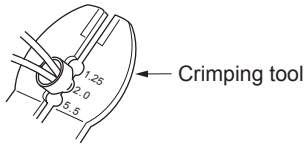

Fig.1-1-6

  e) Check the four points noted in Fig.1-1-7.

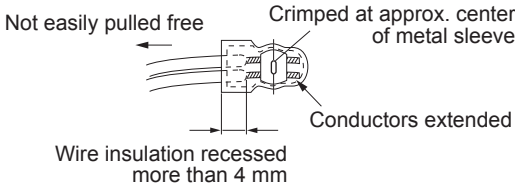

Fig.1-1-7

1.1.2 Safety Check after Servicing

Examine the area surrounding the repaired location for damage or deterioration. Observe that screws, parts and wires have been returned to original positions, Afterwards, perform the following tests and confirm the specified values in order to verify compliance with safety standards.

(1) Insulation resistance test
Confirm the specified insulation resistance or greater between power cord plug prongs and externally exposed parts of the set (RF terminals, antenna terminals, video and audio input and output terminals, microphone jacks, earphone jacks, etc.).
See table 1 below.

(2) Dielectric strength test
Confirm specified dielectric strength or greater between power cord plug prongs and exposed accessible parts of the set (RF terminals, antenna terminals, video and audio input and output terminals, microphone jacks, earphone jacks, etc.). See Fig.1-1-11 below.

(3) Clearance distance
When replacing primary circuit components, confirm specified clearance distance (d), (d') between soldered terminals, and between terminals and surrounding metallic parts. See Fig.1-1-11 below.

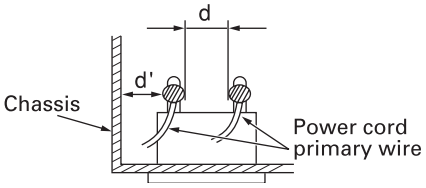

Fig.1-1-8

(4) Leakage current test
Confirm specified or lower leakage current between earth ground/power cord plug prongs and externally exposed accessible parts (RF terminals, antenna terminals, video and audio input and output terminals, microphone jacks, earphone jacks, etc.).
Measuring Method : (Power ON)
Insert load Z between earth ground/power cord plug prongs and externally exposed accessible parts. Use an AC voltmeter to measure across both terminals of load Z. See Fig.1-1-9 and following Fig.1-1-12.

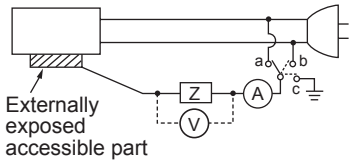

Fig.1-1-9

(5) Grounding (Class 1 model only)
Confirm specified or lower grounding impedance between earth pin in AC inlet and externally exposed accessible parts (Video in, Video out, Audio in, Audio out or Fixing screw etc.).
Measuring Method:
Connect milli ohm meter between earth pin in AC inlet and exposed accessible parts. See Fig.1-1-10 and grounding specifications.

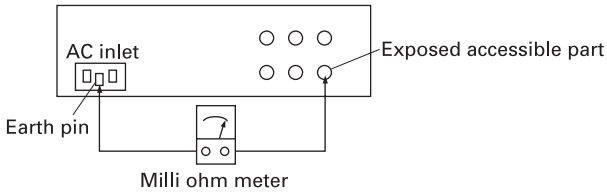

Grounding Specifications

Region	Grounding Impedance (Z)
USA & Canada	Z ≦ 0.1 ohm
Europe & Australia	Z ≦ 0.5 ohm

Fig.1-1-10

AC Line Voltage	Region	Insulation Resistance (R)	Dielectric Strength	Clearance Distance (d), (d')
100 V	Japan	R ≧ 1 MΩ/500 V DC	AC 1 kV 1 minute	d, d' ≧ 3 mm
100 to 240 V			AC 1.5 kV 1 miute	d, d' ≧ 4 mm
110 to 130 V	USA & Canada	1 MΩ ≦ R ≦ 12 MΩ/500 V DC	AC 1 kV 1 minute	d, d' ≧ 3.2 mm
110 to 130 V 200 to 240 V	Europe & Australia	R ≧ 10 MΩ/500 V DC	AC 3 kV 1 minute (Class Ⅱ) AC 1.5 kV 1 minute (Class Ⅰ)	d ≧ 4 mm d' ≧ 8 mm (Power cord) d' ≧ 6 mm (Primary wire)

Fig.1-1-11

AC Line Voltage	Region	Load Z	Leakage Current (i)	a, b, c
100 V	Japan	1 kΩ	i ≦ 1 mA rms	Exposed accessible parts
110 to 130 V	USA & Canada	0.15 μF, 1.5 kΩ	i ≦ 0.5 mA rms	Exposed accessible parts
110 to 130 V 220 to 240 V	Europe & Australia	2 kΩ	i ≦ 0.7 mA peak i ≦ 2 mA dc	Antenna earth terminals
		50 kΩ	i ≦ 0.7 mA peak i ≦ 2 mA dc	Other terminals

Fig.1-1-12

NOTE :

These tables are unofficial and for reference only. Be sure to confirm the precise values for your particular country and locality.

SECTION 2
SPECIFIC SERVICE INSTRUCTIONS

2.1 BEFORE ASSEMBLY AND DISASSEMBLY

2.1.1 Precautions

1. Be sure to disconnect the power supply unit prior to mounting and soldering of parts.
2. Prior to removing a component part that needs to disconnect its connector(s) and its screw(s), first disconnect the wire(s) from the connector(s), and then remove the screw(s).
3. When connecting/disconnecting wires, pay enough attention not to damage the connectors.
4. Be careful in removing or handling the part to which some spacer or shield is attached for reinforcement or insulation.
5. When replacing chip parts (especially IC parts), first remove the solder completely to prevent peeling of the pattern.
6. Tighten screws properly during the procedures. Unless specified otherwise, tighten screws at a torque of 0.088N•m (0.9kgf•cm).

2.1.2 Assembly and disassembly

[Example]

STEP No.	PART	Fig. No.	POINT	NOTE
[1]	TOP COVER ASSEMBLY	Fig.C1	S1,2(L1)	-
[2]	UPPER ASSEMBLY (Inc. VF ASSEMBLY, SPEAKER/MONITOR)	Fig.C2-1	S2a,2(S2b),3(S2c) 2(S2d),S2e,S2c L2,CN2a,b	-
[8]	VF ASSEMBLY	Fig.C2-2	2(S8),L8,CN8a	NOTE 8a NOTE 8b
(1)	(2)	(3)	(4)	(5)

(1) Order of steps in Procedure
When reassembling, preform the step(s) in the reverse order. These numbers are also used as the identification (location) No. of parts Figures.

(2) Part to be removed or installed.

(3) Fig. No. showing Procedure or Part Location.

C = CABINET
D = CAMERA AND BOARD ASSEMBLY

(4) Identification of part to be removed, unhooked, unlocked, released, unplugged, unclamped or unsoldered.

P = Spring
W = Washer
S = Screw
* = Unhook, unlock, release, unplug or unsolder.
2(S3) = 2 Screws (S3)
CN = Connector

(5) Adjustment information for installation.

2.1.3 Destination of connectors

Two kinds of double-arrows in connection tables respectively show kinds of connector/wires.

⇔ : Flat wire
↔ : Wire

[Example]

CONN. No.	CONNECTOR					Pin No.
CN2a	MAIN	CN101	⇔	MONIBW	CN761	40
CN2b	MAIN	CN103	⇔	MINIBW	CN762	10

Remove the parts marked in .

2.1.4 Disconnection of connectors (Wires)

Pull both ends of the connector in the arrow direction, remove the lock and disconnect the flat wire.

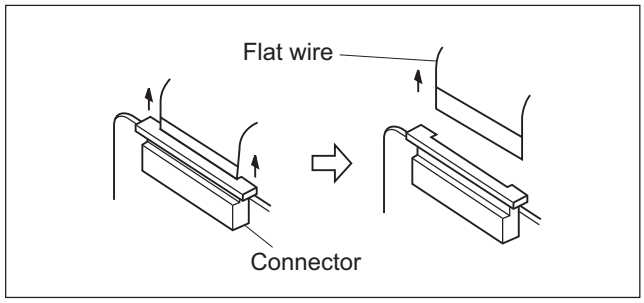

Fig.2-1-1

Extend the locks in the direction of the arrow for unlocking and then pull out the wire. After removing the wire, immediately restore the locks to their original positions because the locks are apt to come off the connector.

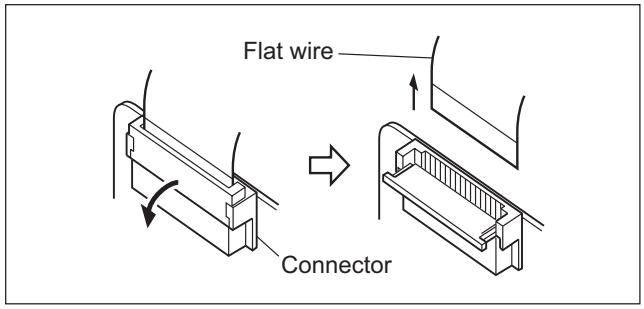

Fig.2-1-2

2.1.5 Tools required for disassembly and assembly

1	Torque driver YTU94088	2	Bit YTU94088-003
3	Tweezers P-895	4	Chip IC replacement jig PTS40844-2
5	Cleaning cloth KSMM-01		

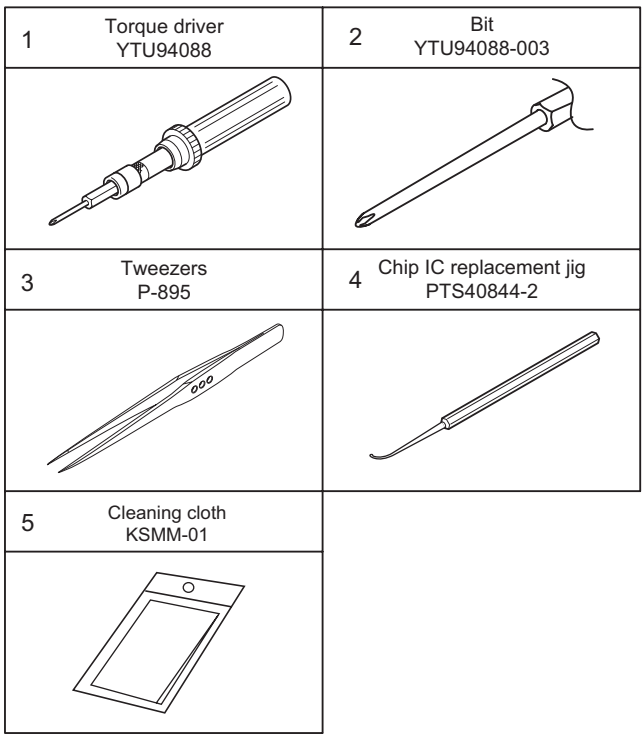

Fig.2-1-3

1.Torque driver

Be sure to use to fastening the mechanism and exterior parts because those parts must strictly be controlled for tightening torque.

2.Bit

This bit is slightly longer than those set in conventional torque drivers.

3.Tweezers

To be used for removing and installing parts and wires.

4.Chip IC replacement jig

To be used for replacement of IC.

5.Cleaning cloth

Recommended cleaning cloth to wipe down the video heads, mechanism (tape transport system), optical lens surface.

2.2 ASSEMBLY AND DISASSEMBLY OF CABINET PARTS

2.2.1 Disassembly flow chart

This flowchart indicates the disassembly step for the cabinet parts and board assembly in order to gain access to item(s) to be serviced. When reassembling, perform the step(s) in reverse order.

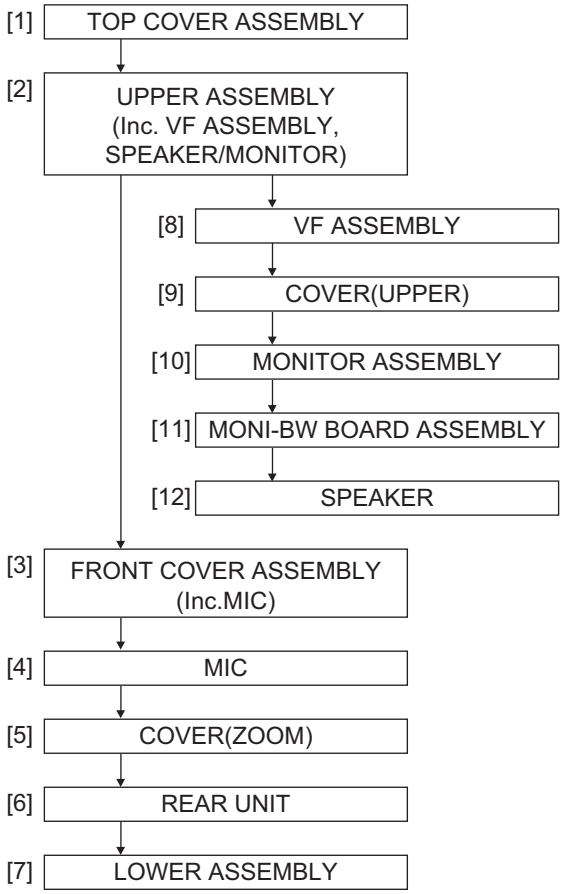

2.2.2 Disassembly method

STEP No.	PART	Fig. No.	POINT	NOTE
[1]	TOP COVER ASSEMBLY	Fig.C1	S1,2(L1)	-
[2]	UPPER ASSEMBLY (Inc. VF ASSEMBLY, SPEAKER/MONITOR)	Fig.C2-1	S2a,2(S2b),3(S2c) 2(S2d),S2e,S2c L2,CN2a,b	-
[8]	VF ASSEMBLY	Fig.C2-2	2(S8),L8,CN8a	NOTE 8a NOTE 8b
[9] /[10]	COVER(UPPER) MONITOR ASSEMBLY	Fig.C2-3	2(S9),L9 2(S10a),CN10a,2(S10b),L10	- NOTE 10a NOTE 10b
[11] /[12]	MONI-BW BOARD ASSEMBLY SPEAKER	Fig.C2-4	2(S11a),2(S11b),4(S11c) BKT(HINGE),KNOB(SLIDE)	NOTE 11a NOTE 11b NOTE 11c
[3] / [4]	FRONT COVER ASSEMBLY (Inc.MIC) MIC	Fig.C3	COVER(JACK),S3,L3a,L3b CN4 S4	NOTE 3
[5] /[6] /[7]	COVER(ZOOM) REAR UNIT LOWER ASSEMBLY	Fig.C4	S5a,3(S5b),2(L5) CN6,S6 CN7a,b,S7a,3(S7b)	-

CONN. No.	CONNECTOR						Pin No.
CN2a	MAIN	CN101	⇔	MONI-BW	CN761		40
CN2b	MAIN	CN103	⇔	MONI-BW	CN762		10
CN8a	MONI-BW	CN763	⇔	VF ASSEMBLY	-		20
CN10a	MONI-BW	CN765	⇔	BL-2.5/3.5	-		32
CN4	MAIN	CN106	↔	MIC	-		5
CN6	MAIN	CN104	↔	REAR UNIT	-		11
CN7a	MAIN	CN102	⇔	JACK	CN501		22
CN7b	MAIN	CN109	⇔	ZOOM UNIT	-		16

Remove the parts marked in .

NOTE 8a:

Take care not to cut the FPC wire when and after removing the VF ASSEMBLY.

NOTE 8b:

As for disassembly/assembly of [8]VF ASSEMBLY, see 2.4 ASSEMBLY AND DISASSEMBLY OF [8] VF ASSEMBLY.

NOTE 10a:

Take care not to cut the FPC when and after removing the MONITOR ASSEMBLY.

NOTE 10b:

As for disassembly/assembly of [10] MONITOR ASSEMBLY, see 2.5 ASSEMBLY AND DISASSEMBLY OF [10] MONITOR ASSEMBLY.

NOTE 11a:

Before removing the MONI-BW BOARD ASSEMBLY, check whether MEMORY CARD is inserted or not. If MEMORY CARD is inserted, pull out the MEMORY CARD before removing the MONI-BW BOARD ASSEMBLY.

NOTE 11b:

Since the SPEAKER is soldered to the MONI-BW BOARD ASSEMBLY, the SPEAKER should not be separated from the MONI-BW BOARD ASSEMBLY except when replacing the SPEAKER.

NOTE 11c:

Take care not to lose the KNOB(SLIDE). When attaching the KNOB(SLIDE), attach the KNOB(SLIDE) in a proper position.

NOTE 3:

After removing the FRONT COVER ASSEMBLY, OP BLOCK ASSEMBLY is not covered with anything. Take care not to damage the OP BLOCK ASSEMBLY when and after removing the FRONT COVER ASSEMBLY.

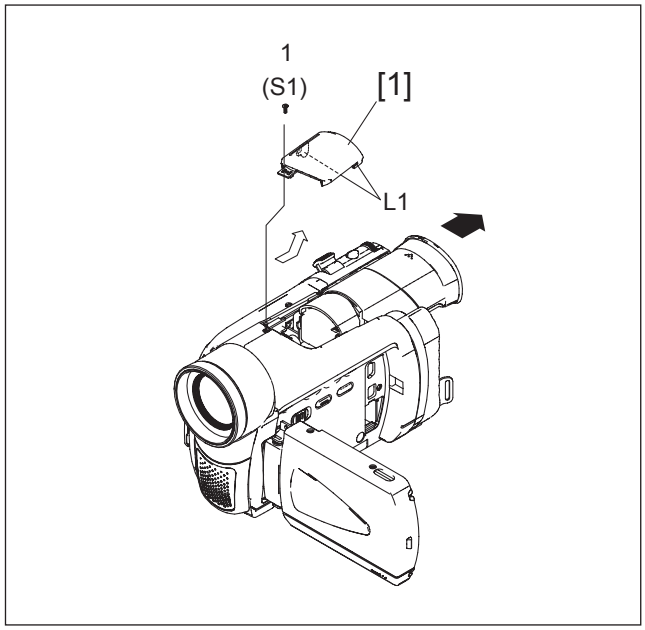

Fig.C1

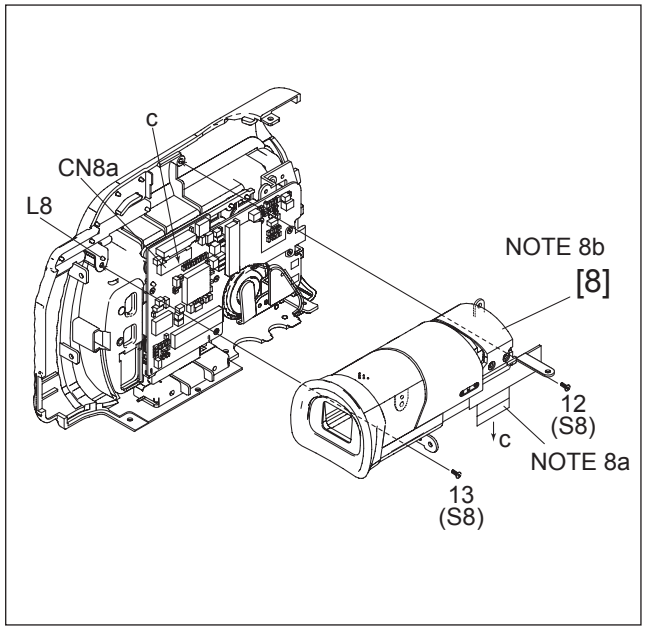

Fig.C2-2

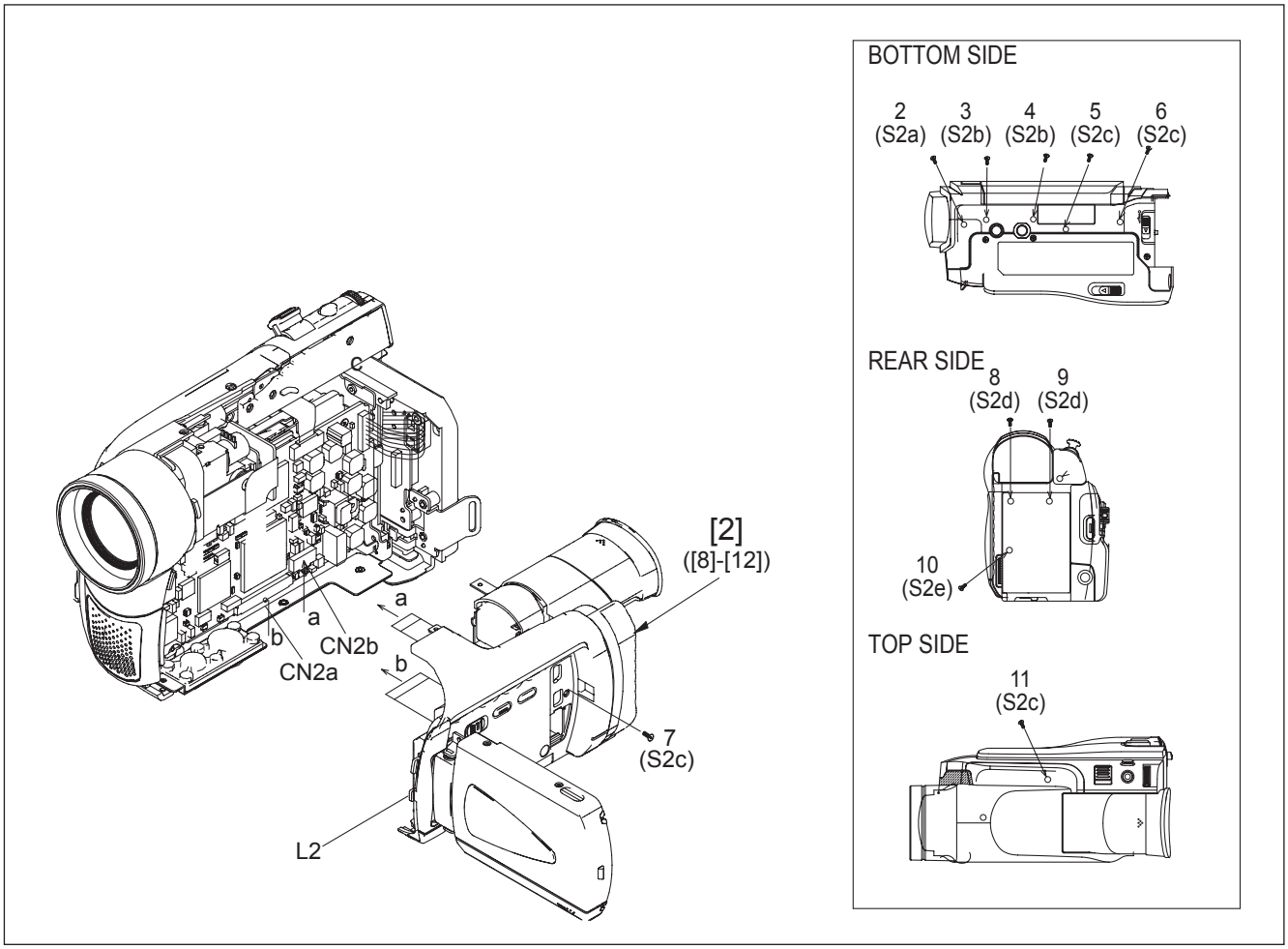

Fig.C2-1

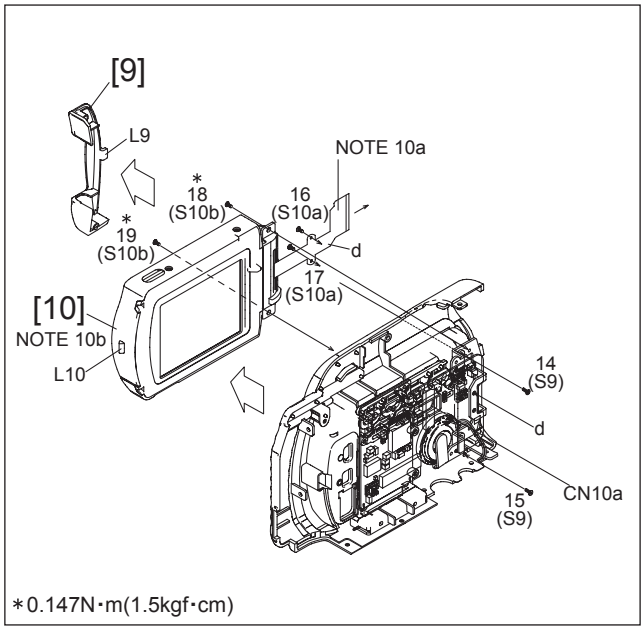

Fig.C2-3

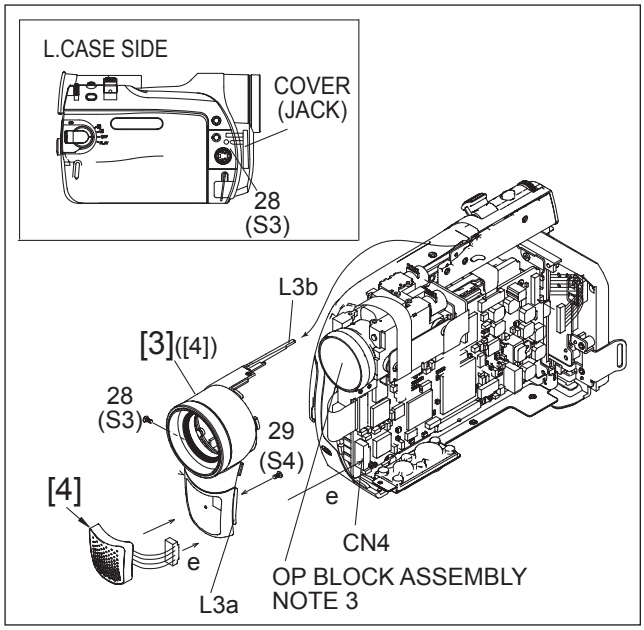

Fig.C3

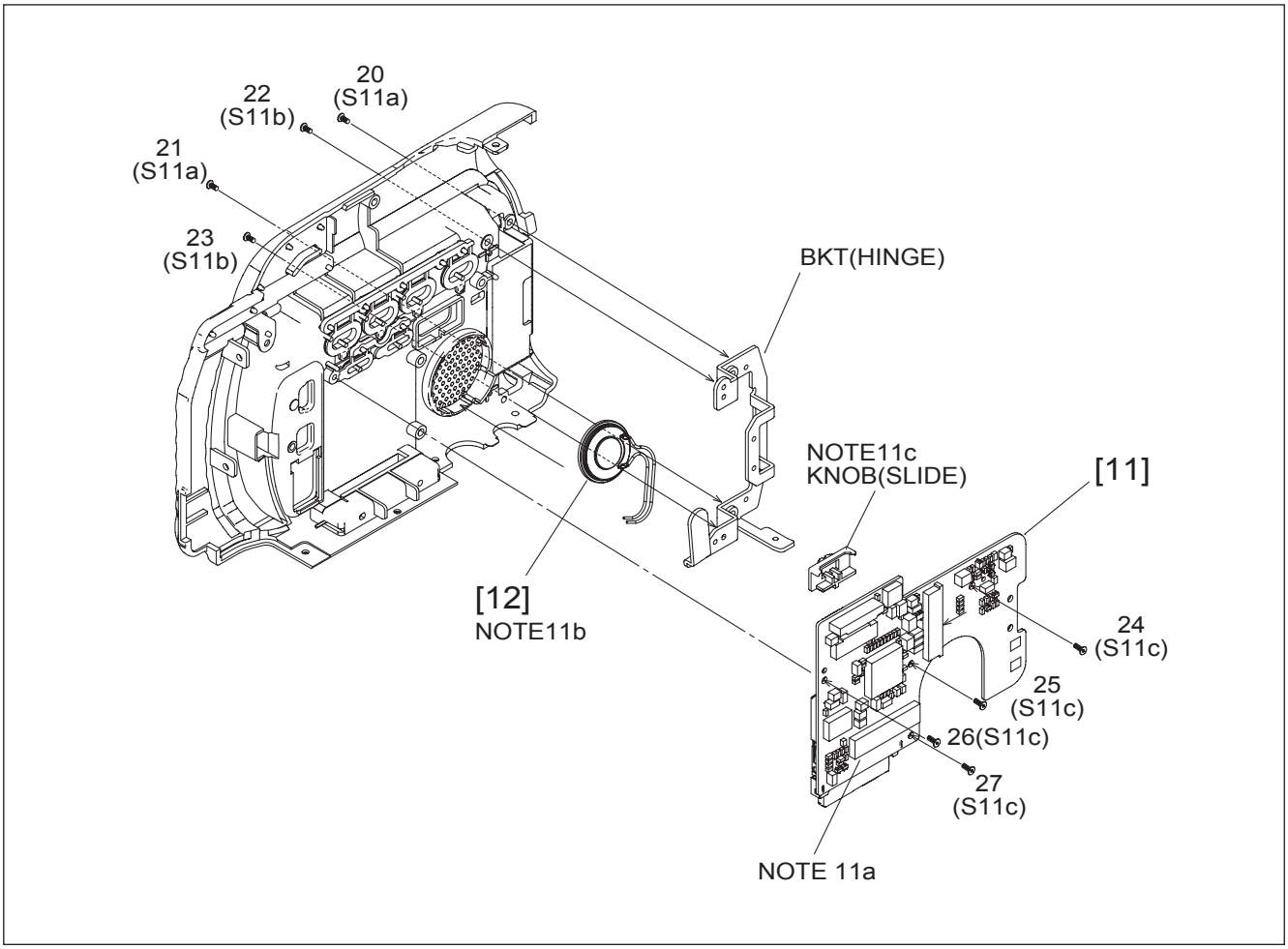

Fig.C2-4

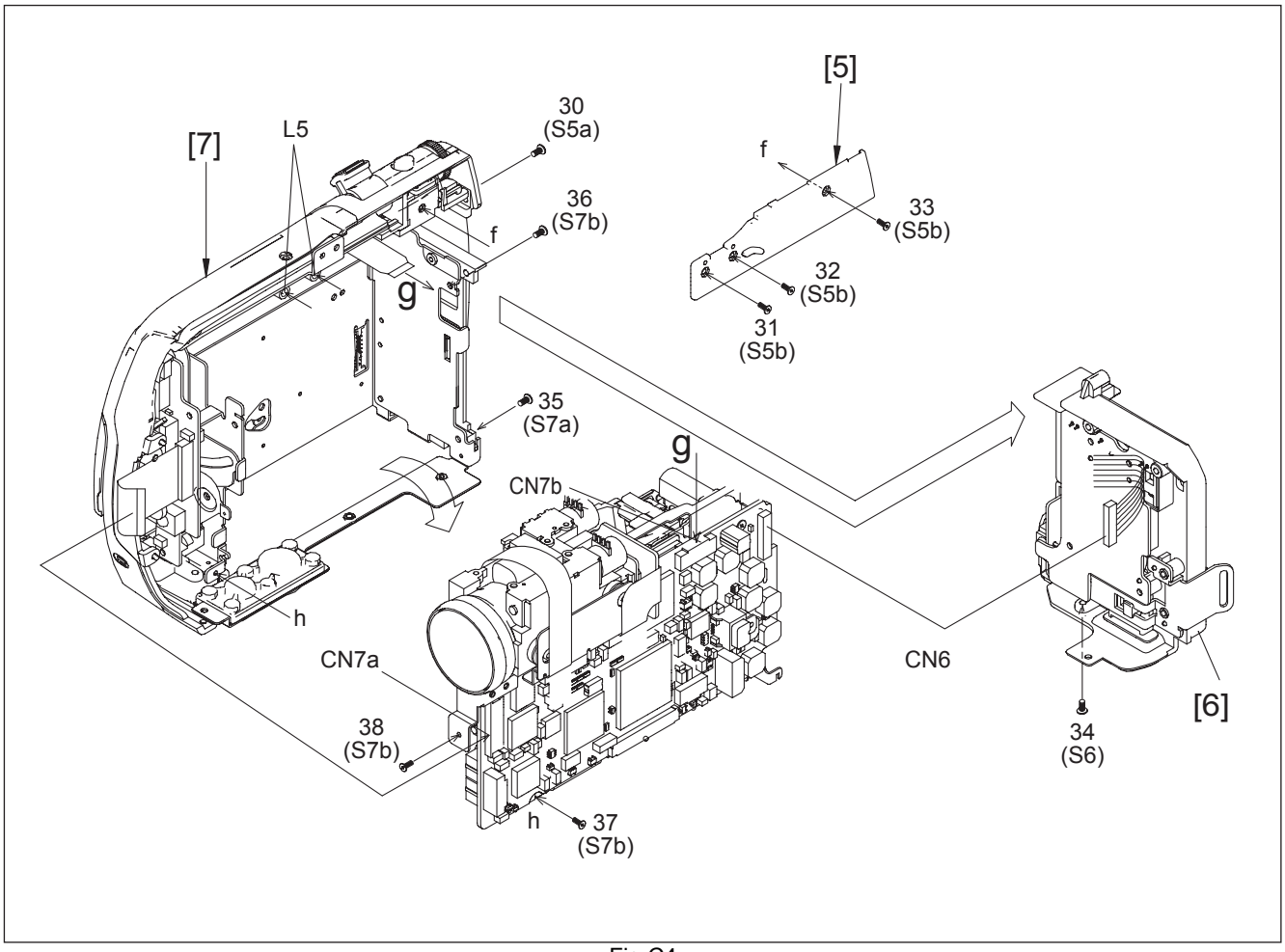
[5]
[7]
L5
30
(S5a)
36
(S7b)
f
g
33
(S5b)
32
(S5b)
31
(S5b)
35
(S7a)
g
CN7b
h
CN7a
38
(S7b)
h
37
(S7b)
CN6
34
(S6)
[6]

Fig.C4

2.3 ASSEMBLY AND DISASSEMBLY OF CAMERA SECTION AND BOARD ASSEMBLY

2.3.1 Disassembly flow chart

This flowchart indicates the disassembly step for the cabinet parts and board assembly in order to gain access to item(s) to be serviced. When reassembling, perform the step(s) in reverse order.

NOTE:

Please see Service Manual No. 86700 (MECHANISM ASSY).

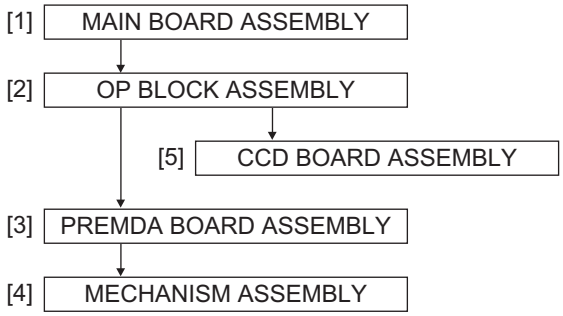

2.3.2 Disassembly method

STEP No.	PART	Fig. No.	POINT	NOTE
[1]	MAIN BOARD ASSEMBLY	Fig.D1	CN1a,b,2(S1),CN1c,d	-
[2]/[5]	OP BLOCK ASSEMBLY / CCD BOARD ASSEMBLY	Fig.D2	S2,L2	NOTE 2
[3]	PREMDA BOARD ASSEMBLY	Fig.D3	2(S3a),L3,SHIELD COVER(PR) CN3a,b,c,d,e,f,2(S3b)	-
[4]	MECHANISM ASSEMBLY		3(S4),BKT(MECHA)	-

CONN. No.	CONNECTOR						Pin No.
CN1a	MAIN	CN108	⇔	OP BLOCK ASSEMBLY	CN501		24
CN1b	MAIN	CN107	⇔	CCD	CN5001		20
CN1c	MAIN	CN111	⇔	PREMDA	CN408		40
CN1d	MAIN	CN110	⇔	PREMDA	CN401		40
CN3a	PREMDA	CN406	⇔	SENSOR	-		16
CN3b	PREMDA	CN405	⇔	CAPSTAN MOTOR	-		18
CN3c	PREMDA	CN404	⇔	DRUM MOTOR	-		11
CN3d	PREMDA	CN402	⇔	HEAD	-		8
CN3e	PREMDA	CN403	⇔	LOADING MOTOR	-		6
CN3f	PREMDA	CN407	⇔	ROTARY ENCODER	-		6

Remove the parts marked in .

NOTE 2:

As for disassembly/assembly of [2] OP BLOCK ASSEMBLY, see 2.6 ASSEMBLY AND DISASSEMBLY OF [2] OP BLOCK ASSEMBLY.

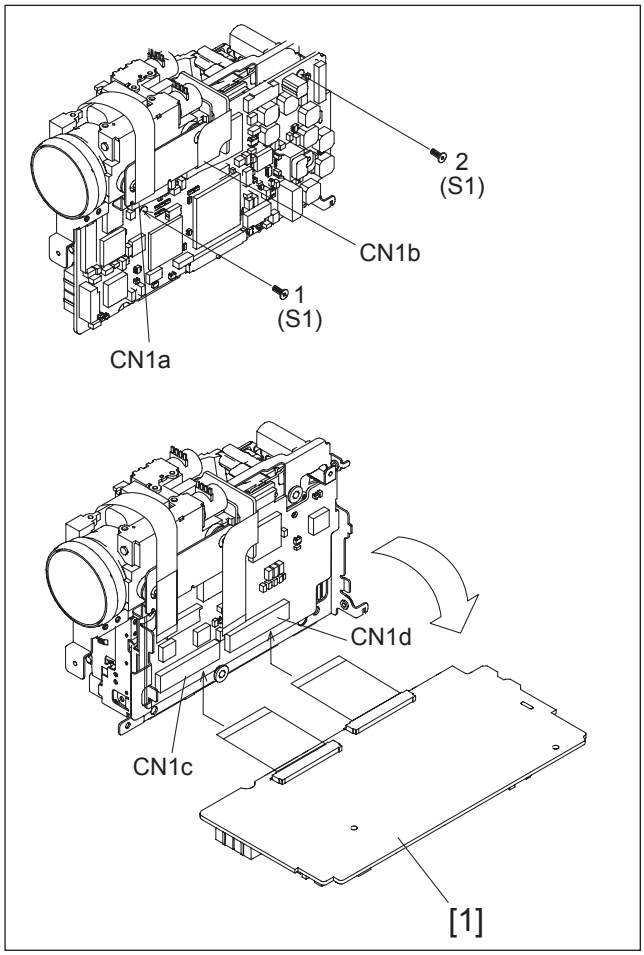

Fig.D1

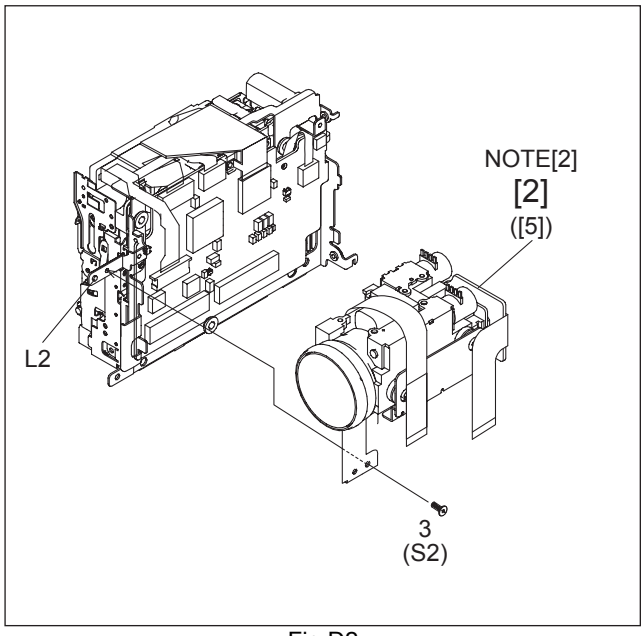

Fig.D2

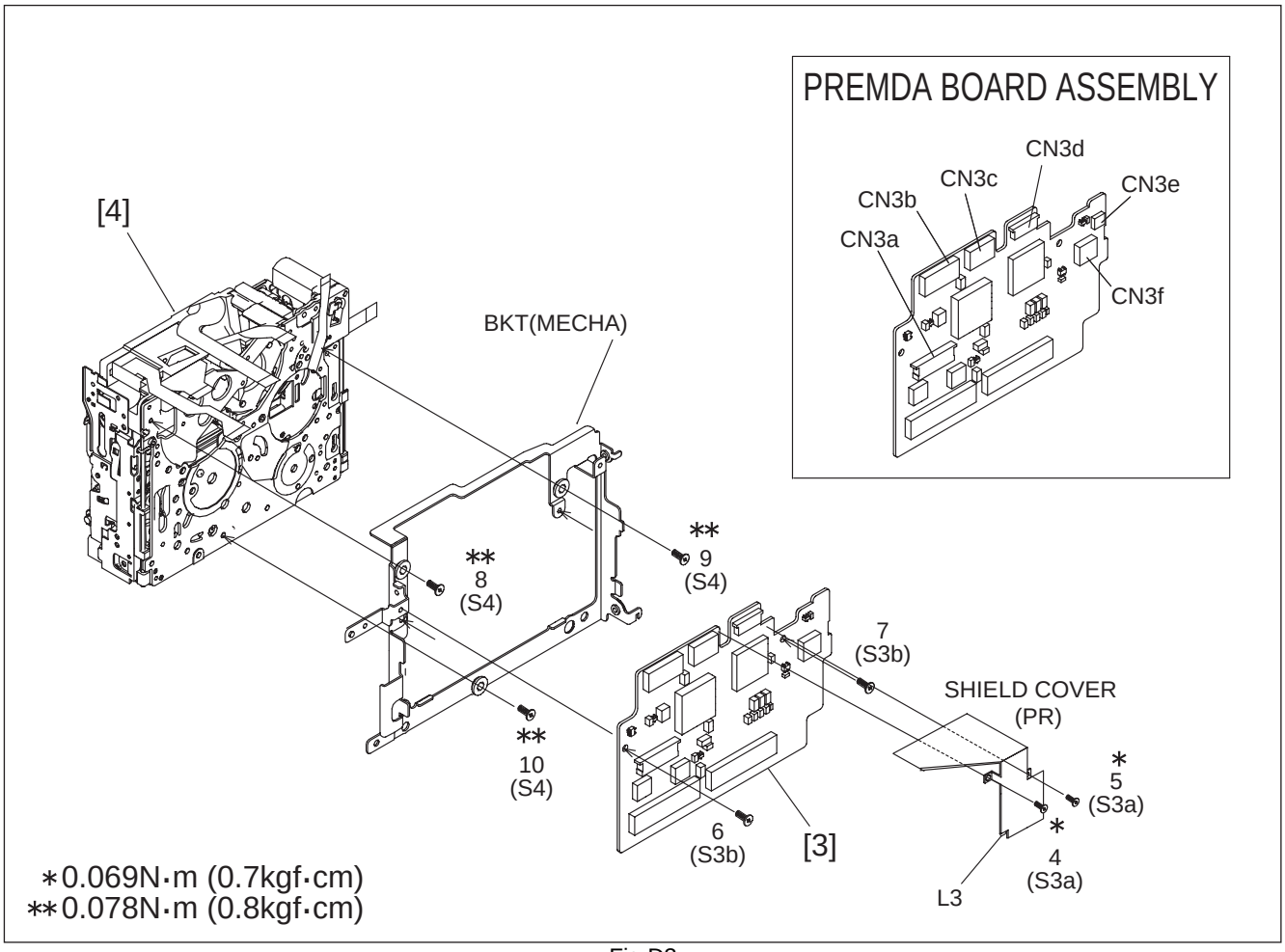
PREMDA BOARD ASSEMBLY
CN3d
CN3c
CN3e
CN3b
CN3a
CN3f
[4]
BKT(MECHA)
** 9 (S4)
** 8 (S4)
7 (S3b)
SHIELD COVER (PR)
** 10 (S4)
* 5 (S3a)
6 (S3b)
[3]
* 4 (S3a)
L3
*0.069N·m (0.7kgf·cm)
**0.078N·m (0.8kgf·cm)

Fig.D3

2.4 ASSEMBLY AND DISASSEMBLY OF [8]VF ASSEMBLY

2.4.1 Disassembly of VF ASSEMBLY

(1) Remove the EYE CUP.
(2) Remove the four screws (1 to 4) and then remove the COVER (VF).
(3) Remove the two screws (5 and 6) and then remove the FPC BOARD from the hook attaching the FPC BOARD.

NOTE 8a:
During the procedure, be careful not to damage the FPC. When attaching the SW BOARD ASSEMBLY, attach the SW BOARD ASSEMBLY so that the SW BOARD ASSEMBLY comes upwards.

(4) Remove the four screws (7 to 10), and then pull out and remove the FPC from the VF HINGE ASSEMBLY.

NOTE 8b:
During the procedure, be careful not to damage the FPC and the SWITCH.

(5) Remove the five screws (11 to 15).
(6) Remove the UPPER CASE(VF) R.
(7) Remove the UPPER CASE(VF) F and then pull out the LENS SA and the LCD UNIT ASSEMBLY with the FPC.

NOTE 8c:
In attaching the LCD UNIT ASSEMBLY, put the projections of the LCD UNIT ASSEMBLY in the slots of the BOTTOM CASE(VF). Put the STOPPER of the FPC inside the BOTTOM CASE(VF). In attaching the UPPER CASE(VF) F and the UPPER CASE(VF) R, attach the UPPER CASE(VF) F first and then the UPPER CASE(VF) R and be careful to keep the FPC inside the BOTTOM CASE(VF).

2.4.2 Disassembly of the LENS SA

(1) Remove the LEVER(LENS).
(2) Remove the SHEET(LENS).
(3) Remove the LENS ASSEMBLY from the GUIDE LENS(VF).

NOTE 8d:
Be careful not to lose the SPRING(LENS).

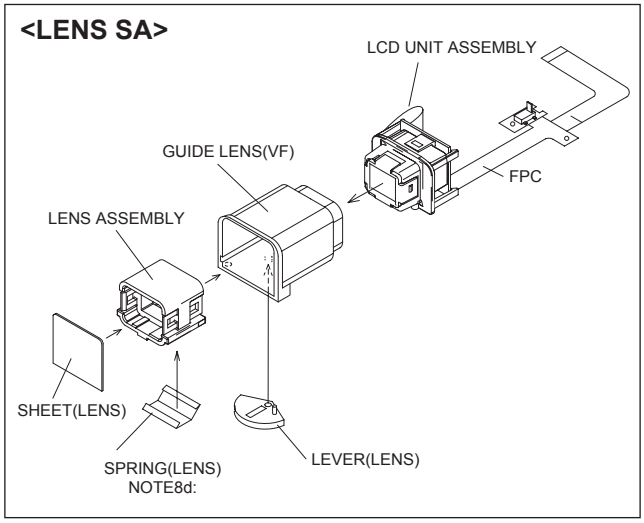

Fig.2-4-2

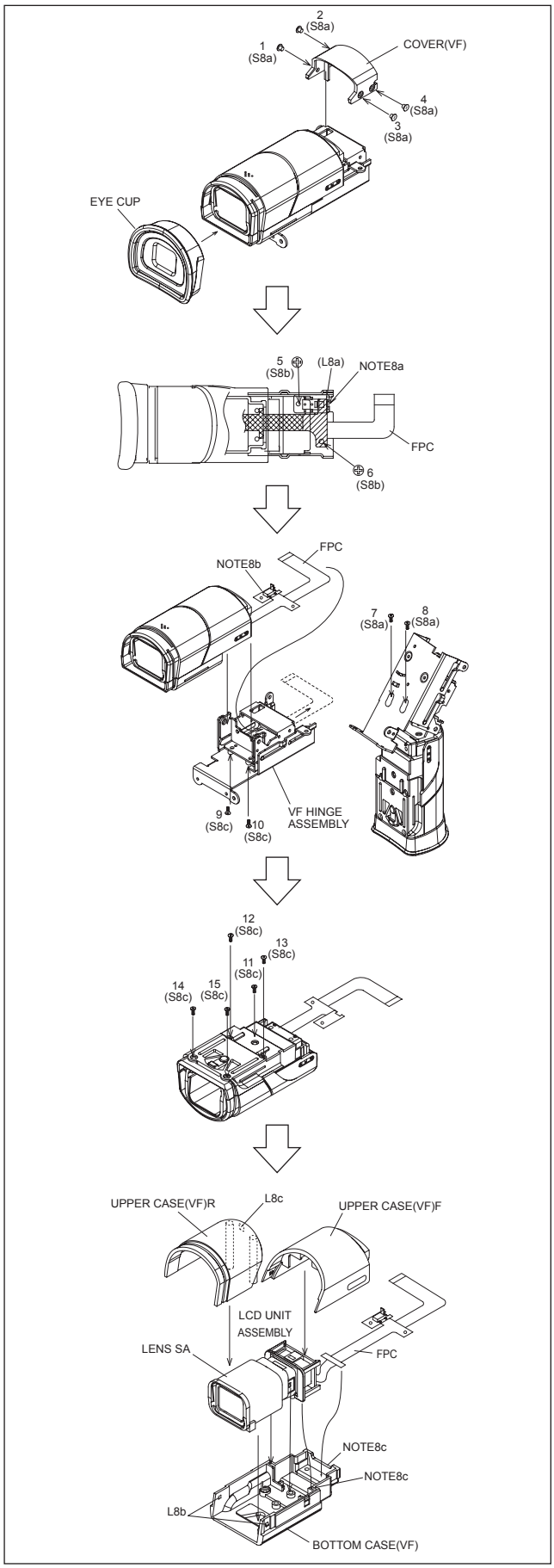

Fig.2-4-1

2.5 ASSEMBLY AND DISASSEMBLY OF [10]MONITOR ASSEMBLY (CABINET PARTS)

2.5.1 Disassembly of MONITOR ASSEMBLY (2.5 INCH)

NOTE:

Be careful in removing or handling the monitor assembly, especially not to soil or scratch the monitor screen during the disassembly procedure.

(1) While removing the four screws (1 to 4) in numerical order and then disengaging the four hooks (L10a-L10d) in alphabetical order, open and remove the MONITOR COVER ASSEMBLY.

(2) Remove the SENSOR BOARD ASSEMBLY from the MONITOR CASE.

(3) Disconnect the FPC in the connectors CN10a and CN10b in this order, and then remove the MONI.HINGE ASSEMBLY.

(4) Disconnect the FPC of the LCD MODULE from the connector CN10c.

(5) Remove one screw (5) and then remove the BL BOARD ASSEMBLY together with the BACK LIGHT ASSEMBLY.

NOTE 10a:

It depends on the inch size of the monitor assembly whether the backlight is supplied as an assembly or as separated parts.
In replacing the backlight assembly, see the Parts List.

NOTE 10b:

Since the BACK LIGHT ASSEMBLY is soldered to the BL BOARD ASSEMBLY, the BACK LIGHT should not be separated from the BL BOARD ASSEMBLY except when replacing them.

(6) Remove the DIFF.SHEET.

(7) Remove the LCD FRAME together with the LCD MODULE.

(8) Remove the SHIELD CASE.

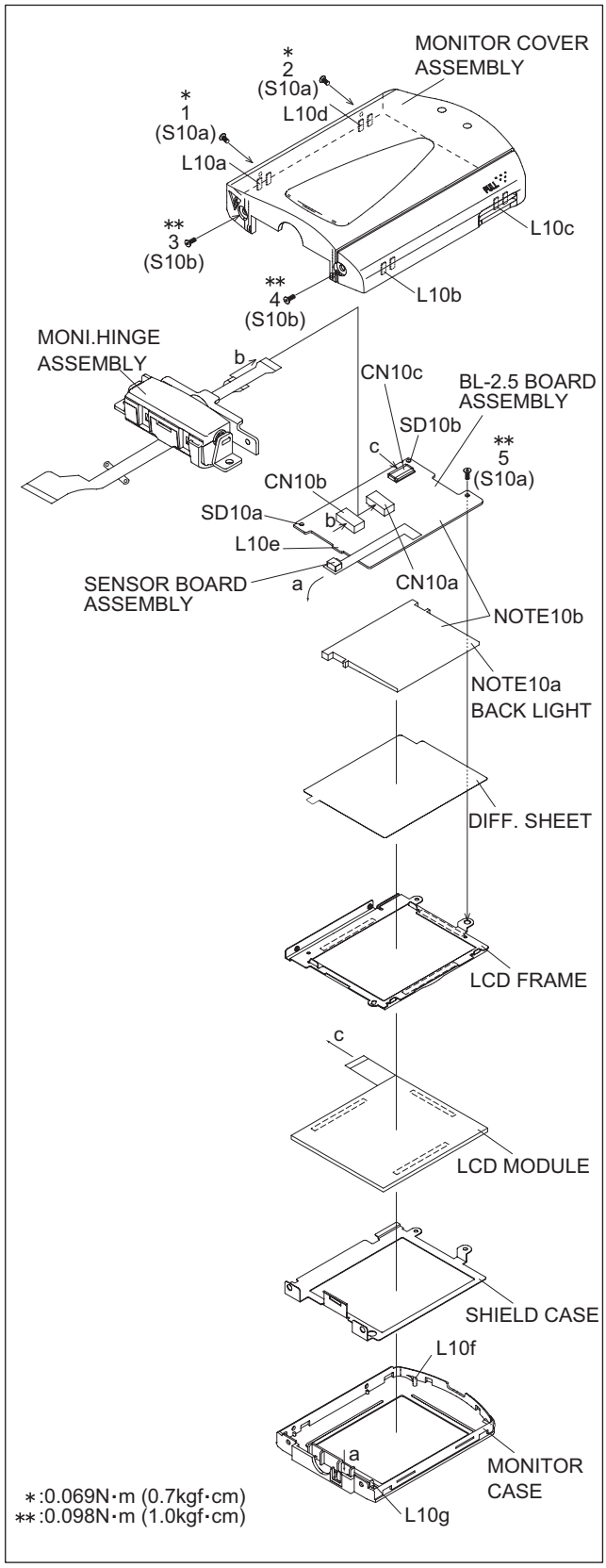

Fig.2-5-1

2.5.2 Disassembly of MONITOR ASSEMBLY (3.5 INCH)

NOTE:

Be careful in removing or handling the monitor assembly, especially not to soil or scratch the monitor screen during the disassembly procedure.

(1) While removing the four screws (1 to 4) in numerical order and then disengaging the four hooks (L10a-L10d) in alphabetical order, open and remove the MONITOR COVER ASSEMBLY.

(2) Remove the SENSOR BOARD ASSEMBLY from the MONITOR CASE.

(3) Disconnect the FPC in the connectors CN10a and CN10b in this order, and then remove the MONI.HINGE ASSEMBLY.

(4) Disconnect the FPC of the LCD MODULE from the connector CN10c.

(5) Remove one screw (5) and then remove the BL BOARD ASSEMBLY together with the BACK LIGHT.

NOTE 10:

Since the BACK LIGHT is soldered to the BL BOARD ASSEMBLY, the BACK LIGHT should not be separated from the BL BOARD ASSEMBLY except when replacing them.

(6) While removing the five hooks (L10e-L10i) in alphabetical order, remove the LCD FRAME together with the LCD MODULE.

(7) Remove the SHIELD CASE.

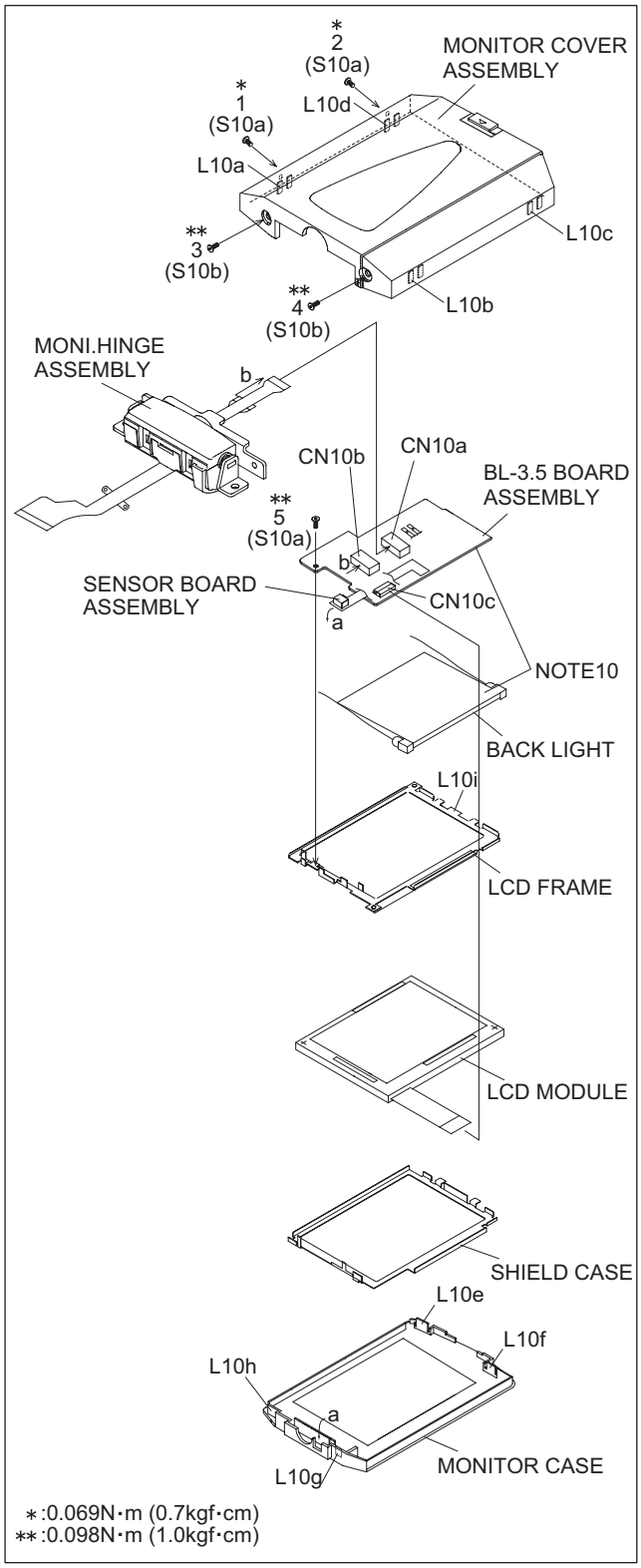

Fig.2-5-2

2.6 ASSEMBLY AND DISASSEMBLY OF [2]OP BLOCK ASSEMBLY / CCD BOARD ASSEMBLY (CAMERA SECTION AND BOARD ASSEMBLY)

2.6.1 Precautions

(1) Take care in handling the CCD IMAGE SENSOR, OP LPF and lens components when performing maintenance etc., especially with regard to surface contamination, attached dust or scratching. If fingerprints are present on the surface they should be wiped away using either a silicon paper, clean chamois or the cleaning cloth.

(2) The CCD IMAGE SENSOR may have been shipped with a protective sheet attached to the transmitting glass. When replacing the CCD IMAGE SENSOR, do not peel off this sheet from the new part until immediately before it is mounted in the OP BLOCK ASSEMBLY.

(3) The orientation of the OP LPF is an important factor for installation. If there is some marking on the OP LPF, be sure to note it down before removing and to reassemble it very carefully as it was referring to the marking.

2.6.2 Disassembly of CCD BOARD ASSEMBLY and CCD BASE ASSEMBLY

(1) Unsolder the CCD BOARD ASSEMBLY by the 14 points (SD2) and then remove it.

(2) Remove the two screws (1, 2) and remove the CCD BASE ASSEMBLY.

(3) Remove the SPACER.

(4) Remove the SHEET.

(5) Remove the OP LPF.

2.6.3 Assembly of CCD BASE ASSEMBLY and CCD BOARD ASSEMBLY

(1) Set the OP LPF to the OP BLOCK ASSEMBLY so that the OP side touches the OP BLOCK ASSEMBLY.

NOTE 2a:

Pay careful attention to the orientation of the OP LPF.

(2) Set the SHEET to the OP LPF not to come off the right position.

(3) Attach the SPACER to the OP BLOCK ASSEMBLY.

(4) Fasten them together with the two screws (1, 2).

(5) Set the CCD BOARD ASSEMBLY in the CCD BASE ASSEMBLY, and then solder it by the 14 points (SD2).

2.6.4 Replacement of service repair parts

The service repair parts for the OP BLOCK ASSEMBLY are as listed below.

Before replacement of these parts, remove the BRACKET (OP BLOCK ASSEMBLY) as required.

Take special care not to disconnect any of the FPC wires or cause any damage due to soldering (excessive heating).

(1) FOCUS MOTOR

(2) ZOOM MOTOR

(3) IRIS MOTOR UNIT

NOTE 2b:

When replacing the FOCUS MOTOR or the ZOOM MOTOR, solder the FPC at a space of about 1 mm above the terminal pin.

NOTE 2c:

The IRIS MOTOR UNIT includes the FPC ASSEMBLY and two sensors.

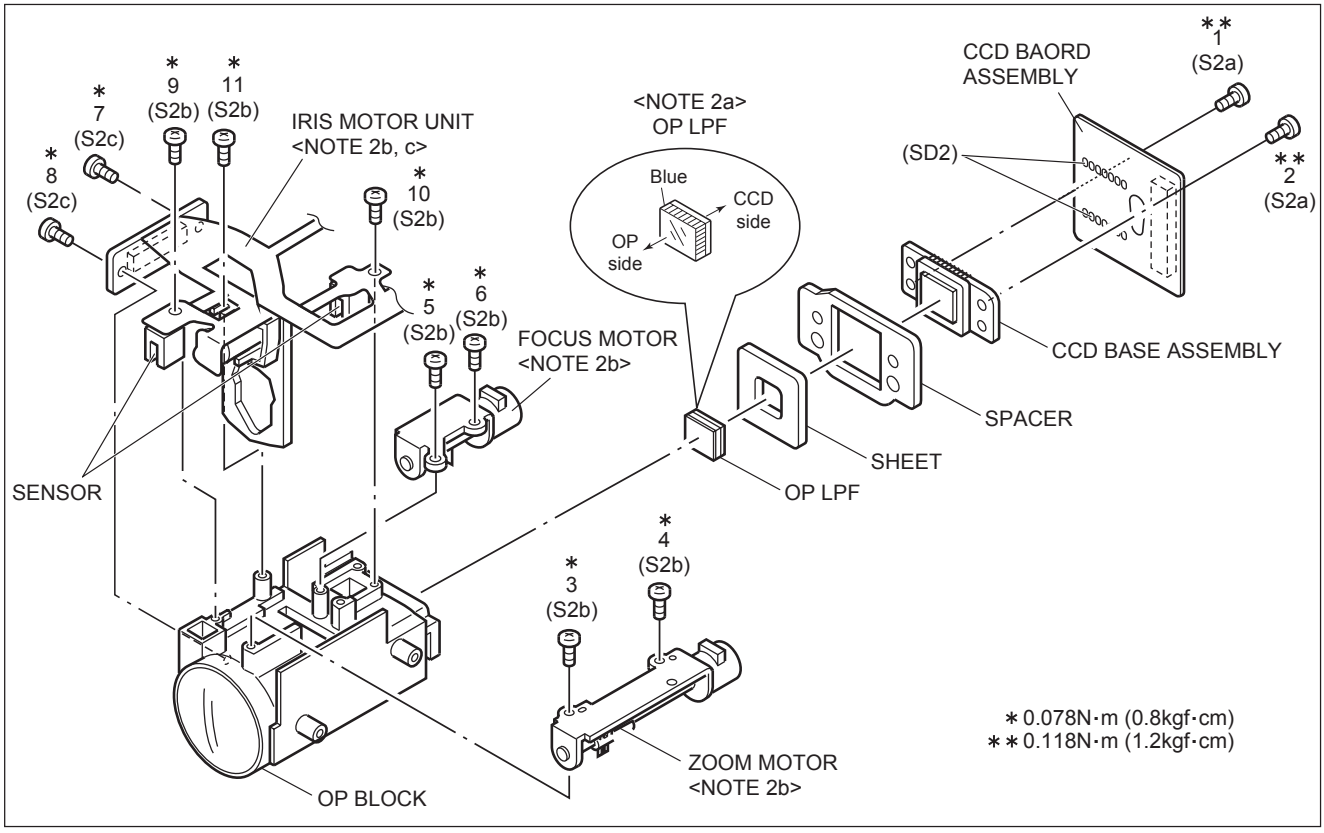

Fig.2-6-1

2.7 SERVICE NOTE

Use the following chart to manage screws

<CABINET PART>

Symbol No.	[1]	[2] ([8]-[12])										[8]		[9]		[10]				[11] ([12])							
Removing order of screw	1	2	3	4	5	6	7	8	9	10	11	12	13	14	15	16	17	18	19	20	21	22	23	24	25	26	27
Place to stick screw																		*	*								
Reference drawing (Fig.No.)	C1	C2-1										C2-2		C2-3						C2-4							
Screw tightening torque	Ⅰ																	Ⅱ		Ⅰ							

Symbol No.	[3]	[4]	[5]				[6]	[7]			
Removing order of screw	28	29	30	31	32	33	34	35	36	37	38
Place to stick screw											
Reference drawing (Fig.No.)	C3		C4								
Screw tightening torque	Ⅰ										

<CAMERA AND BOARD ASSEMBLY>

Symbol No.	[1]		[2]	[3]				[4]		
Removing order of screw	1	2	3	4	5	6	7	8	9	10
Place to stick screw										
Reference drawing (Fig.No.)	D1		D2	D3						
Screw tightening torque	Ⅰ			Ⅲ		Ⅰ		Ⅳ		

<VF ASSEMBLY>

Symbol No.	[8]														
Removing order of screw	1	2	3	4	5	6	7	8	9	10	11	12	13	14	15
Place to stick screw					*	*									
Reference drawing (Fig.No.)	2-4-1														
Screw tightening torque	Ⅳ														

<MONITOR ASSEMBLY>

Symbol No.	[10]				
Removing order of screw	1	2	3	4	5
Place to stick screw					
Reference drawing (Fig.No.)	2-5-1,2				
Screw tightening torque	Ⅲ		Ⅴ		

<OP BLOCK ASSEMBLY>

Symbol No.	[2]/[5]										
Removing order of screw	1	2	3	4	5	6	7	8	9	10	11
Place to stick screw											
Reference drawing (Fig.No.)	2-6-1										
Screw tightening torque	Ⅵ		Ⅳ								

<NOTE>

- * : Don't reuse the screw, because screw lock bond was applied to them.
- Pay careful attention to tightening torque for each screw.

Ⅰ : 0.088N·m (0.9kgf·cm)　Ⅱ : 0.147N·m (1.5kgf·cm)　Ⅲ : 0.069N·m (0.7kgf·cm)
Ⅳ : 0.078N·m (0.8kgf·cm)　Ⅴ : 0.098N·m (1.0kgf·cm)　Ⅵ : 0.118N·m (1.2kgf·cm)

2.8 TAKE OUT CASSETTE TAPE

NOTE :

The following procedure describes a simplified method of ejecting the cassette tape in case it is not possible to eject it, due to an electrical failure.

Be careful not to damage any of the parts or the tape when performing repairs or maintenance work.

(1) Remove the Power Unit (battery, DC code, etc.) from the set.

(2) Open the CASSETTE COVER.

(3) Attach a piece of PVC TAPE at the front of the CASSETTE HOUSING ASSEMBLY.

NOTE:

This helps prevent the tape from being damaged when the CASSETTE HOUSING ASSEMBLY is moved upward at the unloading end.

(4) Apply DC 3V to the electrode on the top surface of the LOADING MOTOR ASSEMBLY to set the MECHANISM ASSEMBLY to the EJECT mode.
Unloading end is EJECT mode.

(5) If there is any slack tape in the tape transport system, wind it inside the DVC CASSETTE TAPE by turning the REEL DISK ASSEMBLY (SUP) from the backside of the SLIDE DECK ASSEMBLY.

(6) Peel off the PVC TAPE and take out the DVC CASSETTE TAPE from the CASSETTE HOUSING ASSEMBLY.

NOTE:

Make sure that grease or a similar substance is not attached to the surface of the tape.
Similarly, also make sure that grease or a similar substance is not attached on the MECHANISM ASSEMBLY.

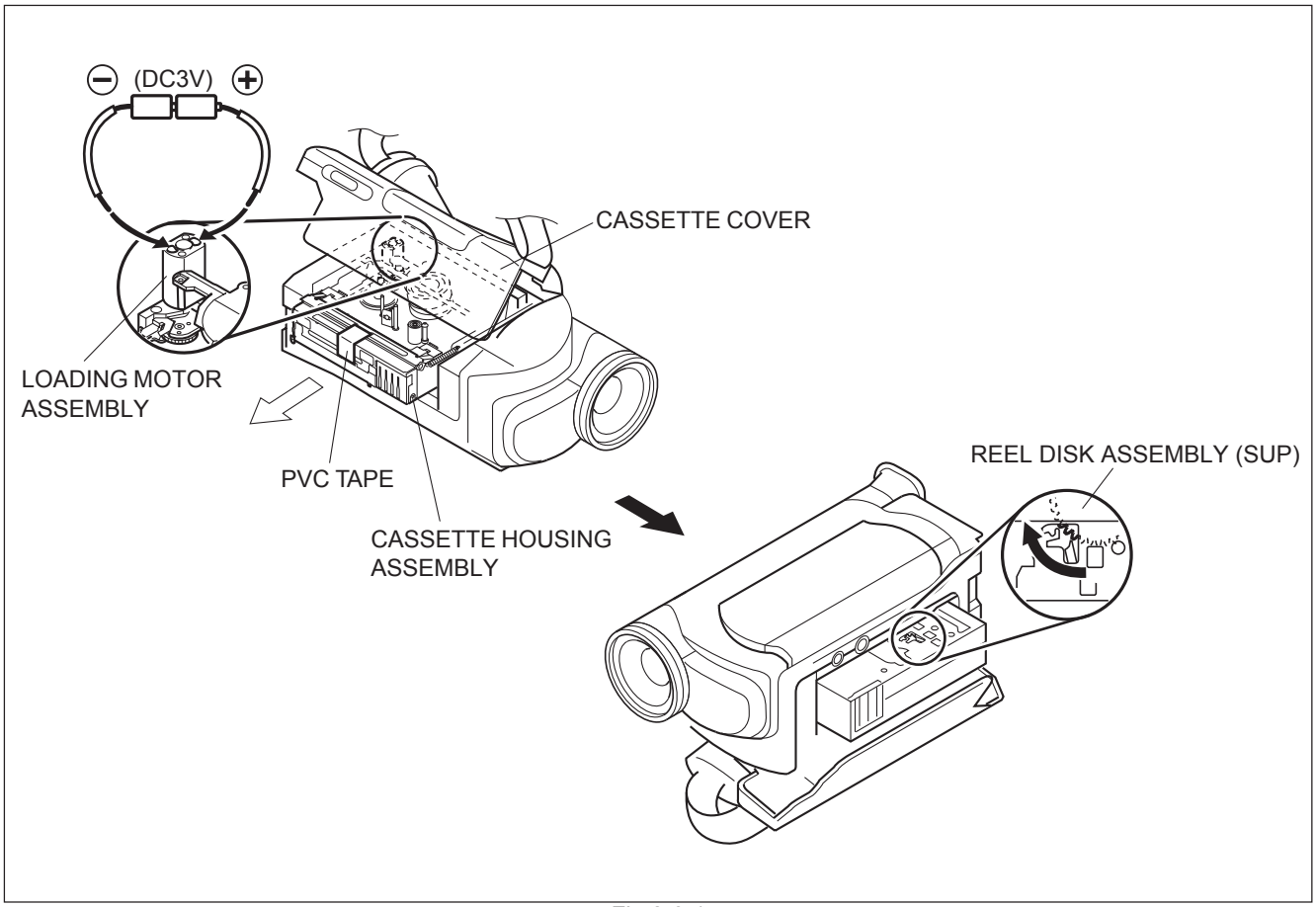

Fig.2-8-1

2.9 EMERGENCY DISPLAY

Whenever some abnormal signal is input to the syscon CPU, an error number (E01, as an example) is displayed on the LCD monitor or (in the electronic view finder).
In every error status, such the message as shown below alter nately appear over and over.

- In an emergency mode, all operations except turning on/off the POWER switch are ineffectual.

Example (in case of the error number E01):

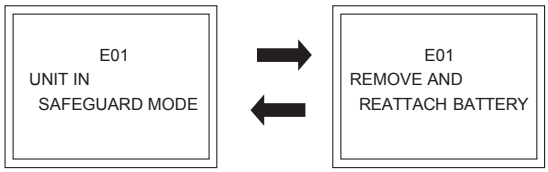

LCD display	Emergency mode	Details	Possible cause
E01	LOADING	In the case the encoder position is not shifted to the next point though the loading motor has rotated in the loading direction for 4 seconds or more. This error is defined as [E01].	1. The mechanism is locked during mode shift. 2. The mechanism is locked at the mechanism loading end, because the encoder position is skipped during mechanism mode shift. 3. No power is supplied to the loading MDA.
E02	UNLOADING	In the case the encoder position is not shifted to the next point though the loading motor has rotated in the unloading direction for 4 seconds or more. This error is defined as [E02].	1. The mechanism is locked during mode shift. 2. The mechanism is locked at the mechanism loading end, because the encoder position is skipped during mechanism mode shift.
E03	TU & SUP REEL FG	In the case no REEL FG is produced for 4 seconds or more in the capstan rotation mode after loading was complete, the mechanism mode is shifted to STOP with the pinch roller set off. This error is defined as [E03]. However, no REEL EMG is detected in the SLW/STILL mode.	1. The idler gear does not engage with the reel disk well. 2. Though the idler gear and reel disk are engaged with each other, the tape is not wound because of overload to the mechanism. 3. No FG pulse is output from the reel sensor. 4. No power is supplied to the reel sensor. 5. Tape transport operation takes place with a cassette having no tape inside. 6. The tape slackens and no pulse is produced until the slack is taken up and the tape comes into the normal status.
E04	DRUM FG	In the case there is no DRUM FG input in the drum rotation mode for 4 seconds or more. This error is defined as [E04], and the mechanism mode is shifted to STOP with the pinch roller set off.	1. The drum cannot be started or drum rotation is stopped because tape transport load is too high. 1) Tape tension is extremely high. 2) The tape is damaged or soiled with grease, etc. 2. The DRUM FG signal is not received by the syscon CPU. 1) Disconnection in the middle of the signal line. 2) Failure of the DRUM FG pulse generator (hall element). 3. No drum control voltage is supplied to the MDA. 4. No power is supplied to the DRUM MDA.
E05	-	-	-
E06	CAPSTAN FG	In the case no CAPSTAN FG is produced in the capstan rotation mode for 2 seconds or more. This error is defined as [E06], and the mechanism mode is shifted to STOP with the pinch roller set off. However, no CAPSTAN EMG is detected in the STILL/FF/REW mode.	1. The CAPSTAN FG signal is not received by the syscon CPU. 1) Disconnection in the middle of the signal line. 2) Failure of the CAPSTAN FG pulse generator (MR element). 2. No capstan control voltage is supplied to the MDA. 4. The capstan cannot be started or capstan rotation is stopped because tape transport load is too high. 1) Tape tension is extremely high. (Mechanical locking) 2) The tape is damaged or soiled with grease, etc. (Tape tangling occurs, etc.)

Fig.2-9-1

SECTION 3
ADJUSTMENT

3.1 PREPARATION

(1) Precaution

This model does not contain adjustment controls (VR). General deck system, camera system and monitor system adjustment are not required. However, if MAIN board need replacement, please use original EEP ROM on to new board. Then adjustment are not required. And if parts such as the following need replacement, special computerized adjustment are required. 3.5.1 Electrical adjustment with personal computer is setup and it adjusts using a service support system. Please contact to JVC Service for detail information.

- OP BLOCK ASSEMBLY
- EEP ROM (IC1005 of MAIN board)
- MONITOR / VF ASSEMBLY

In the event of malfunction with electrical circuits, troubleshooting with the aid of proper test instruments most be done first, and then commence necessary repair, replacement and adjustment, etc.

a) In case of wiring to chip test points for measurement, use IC clips, etc. to avoid any stress.
b) Since connectors are fragile, carefully handle them in disconnecting and connecting.
c) Short circuit between operation unit and DECK chassis.

(2) Required test equipment

a) Color TV monitor.
b) AC power adapter
c) Oscilloscope (dual-trace type, observable 100 MHz or higher frequency)
   - It is recommended to use one observable 300 MHz or higher frequency.
d) Digital voltmeter
e) Frequency counter (with threshold level adjuster)
f) Personal computer

3.2 TOOLS REQUIRED FOR ADJUSTMENT

1 Alignment tape MC-2	2 Guide driver (Hexagonal) D-770-1.27
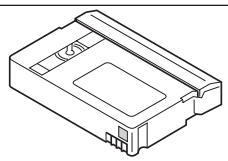	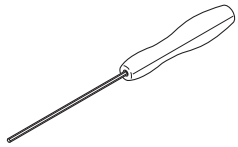
3 INF adjustment lens YTU92001B	4 INF lens holder YTU94087
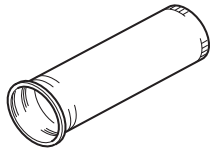	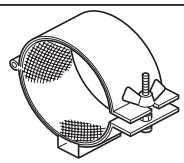
5 Camera stand YTU93079	6 Light box assembly YTU93096A
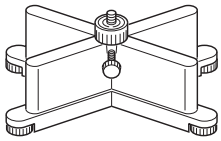	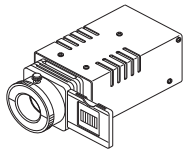
7 Gray scale chart YTU94133A	8 Color bar chart YTU94133C
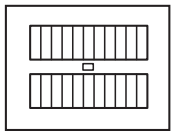	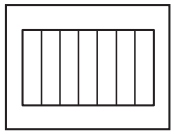
9 Jig connector cable YTU93106B	10 Extension connector YTU94145C-30
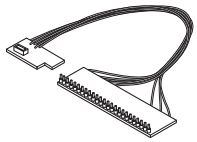	
11 Communication cable YTU93107A	12 PC cable QAM0099-005
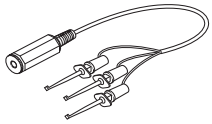	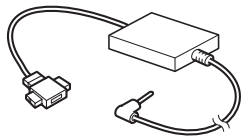
13 Service support system YTU94057-67	14 Cleaning cloth KSMM-01
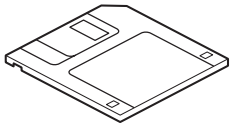	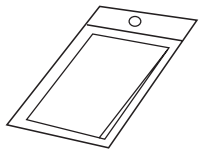

Fig.3-2-1

1. Alignment tape

To be used for check and adjustment of interchangeability of the mechanism.

2. Guide driver (Hexagonal)

To be used to turn the guide roller to adjustment of the linarity of playback envelope.

3.INF adjustment lens

To be used for adjustment of the camera system. For the usage of the INF adjustment lens, refer to the Service Bulletin No. YA-SB-10035.

4.INF lens holder

To be used together with the Camera stand (6) for operating the Videocamera in the stripped-down condition such as the status without the exterior parts or for using commodities that are not yet conformable to the interchangeable ring. For the usage of the INF lens holder, refer to the Service Bulletin No. YA-SB-10035.

5.Camera stand

To be used together with the INF adjustment lens holder. For the usage of the Camera stand, refer to the Service Bulletin No. YA-SB-10035.

6.Light box assembly

To be used for adjustment of the camera system. For the usage of the Light box assembly, refer to the Service Bulletin No. YA-SB-10035.

7.Gray scale chart

To be used for adjustment of the camera system. For the usage of the INF adjustment lens, refer to the Service Bulletin No. YA-SB-10035.

8.Color bar chart

To be used for adjustment of the camera system. For the usage of the INF adjustment lens, refer to the Service Bulletin No. YA-SB-10035.

9. Jig connector cable

Connected to CN105 of the main board and used for electrical adjustment, etc.

NOTE:

Only some of the connectors in the JIG connector (YTU93106B) are soldered to wires.

It is desirable that you solder all the connectors to wires before using the JIG connector (YTU93106B), but you should solder only the connectors shown in the following JIG connector schematic diagram to wires because they are used in this model.

As for the details, see 3.3 JIG CONNECTOR CABLE.

10.Extension connector

Connect this extension connector to the connector of the jig connector cable for extending the cable connector.

NOTE:

removing the cover (for jig), use this extension connector triple for connecting the jig connector cable.

11.Communication Cable

Connect the Communication cable between the PC cable and Jig connector cable when performing a PC adjustment.

12.PC cable

To be used to connect the Videocamera and a personal computer with each other when a personal computer issued for adjustment.

13.Service support system

To be used for adjustment with a personal computer. Software can be downloaded also from JS-net.

14.Cleaning cloth

Recommended the Cleaning cloth to wipe down the video heads, mechanism (tape transport system), optical lens surface.

3.3 JIG CONNECTOR CABLE

Nine wires have been soldered to the JIG CONNECTOR CABLE (YTU93106B).
Solder another nine wires to the JIG CONNECTOR CABLE (YTU93106B) to use in this set.
See the JIG CONNECTOR SCHEMATIC DIAGRAM and JIG CONNECTOR BOARD to solder the nine wires.

3.3.1 JIG CONNECTOR SCHEMATIC DIAGRAM

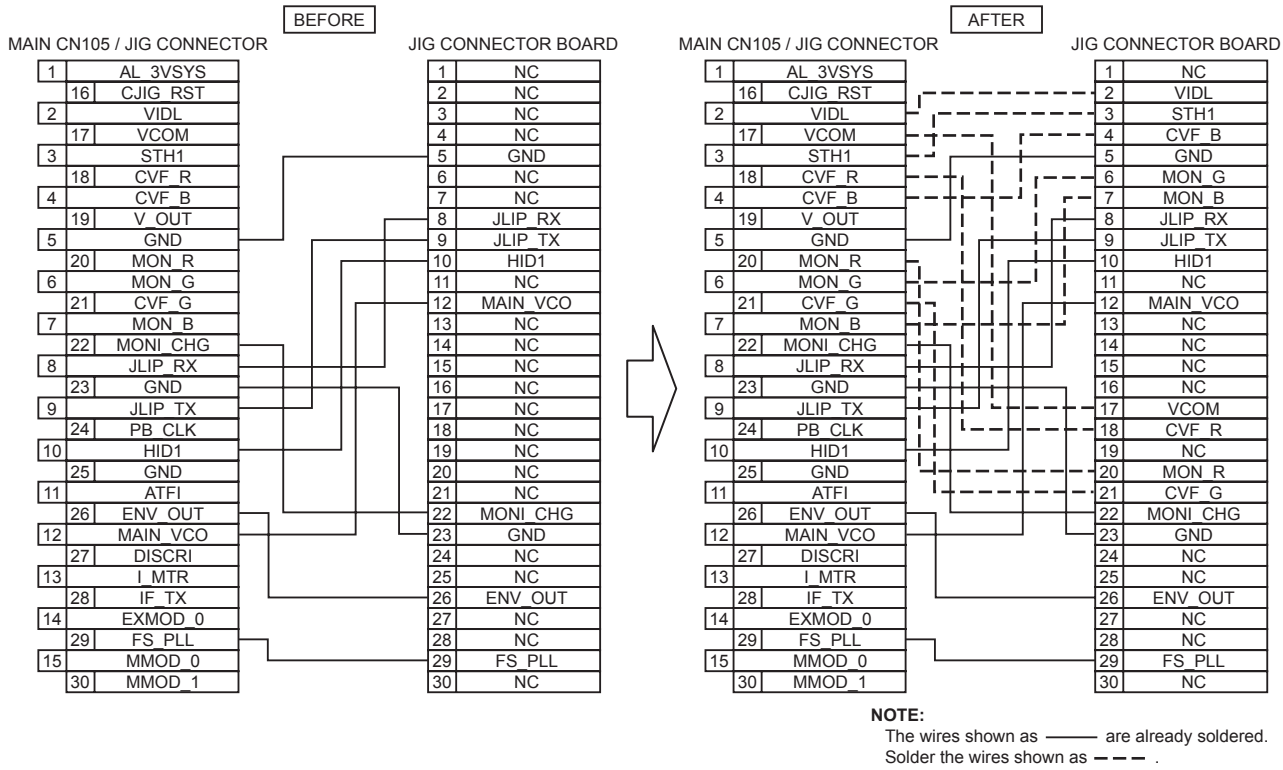

Fig.3-3-1

3.3.2 JIG CONNECTOR BOARD

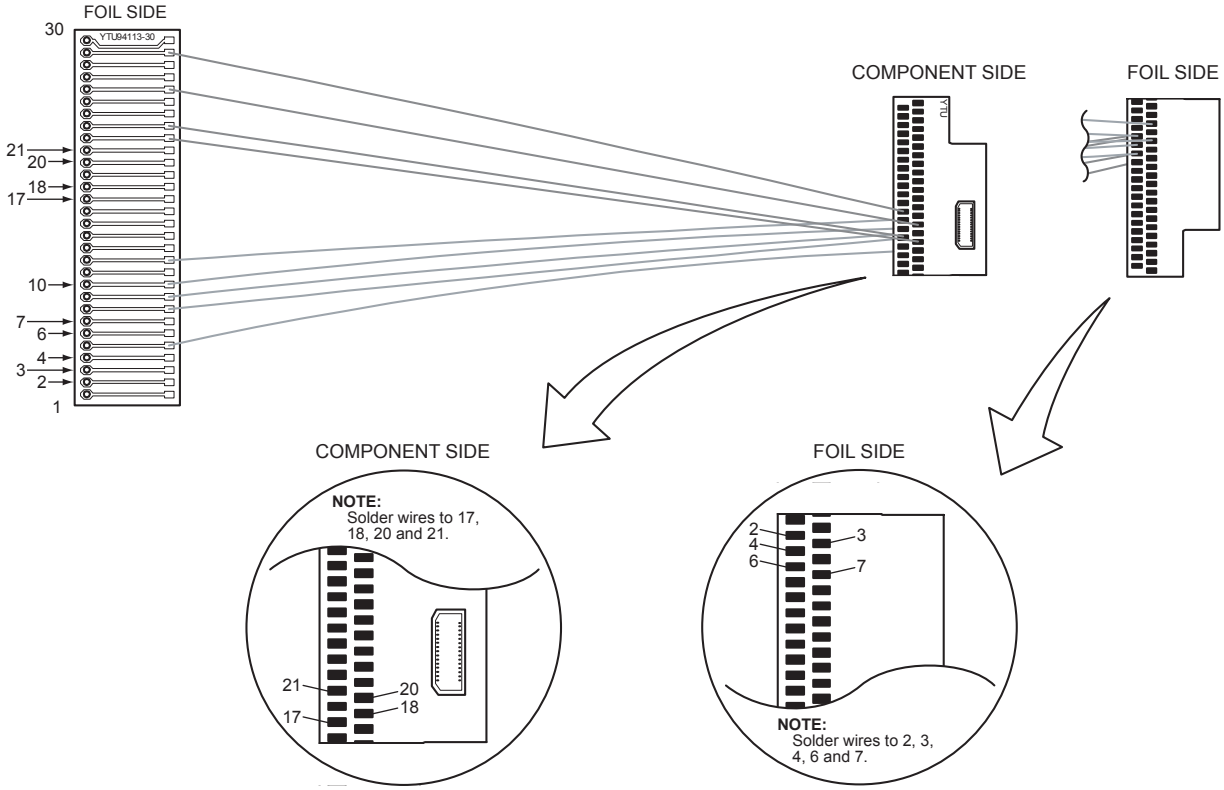

Fig.3-3-2

3.4 MECHANISM COMPATIBILITY ADJUSTMENT

3.4.1 Tape pattern check

(1) Connect the JIG CONNECTOR CABLE to the set.
As for the connection procedure, JIG CONNECTOR BOARD and see 3.5 ELECTRICAL ADJUSTMENT.

(2) Remove the COVER(ADJUST)

(3) Play back the compatibility adjustment tape.

(4) While triggering the HID1, observe the waveform of ENV_OUT.

(5) Confirm that the waveform is free from remarkable level-down, and entirely parallel and straight.

(6) In case any level-down is observed on the left hand side, straighten the level by turning the GUIDE ROLLER (SUP) of the POLE BASE ASSEMBLY.
In case any level-down is observed on the right hand side, however, straighten the level by turning the GUIDE ROLLER(TU) of the POLE BASE ASSEMBLY.

(7) After adjustment, try the unloading motion once, and confirm that the waveform is flat (straight) when the tape has been played back again.
Moreover, perform readjustment as required.

(8) When the recording has been played back again, play back the self-recording to confirm that the waveform is flat.

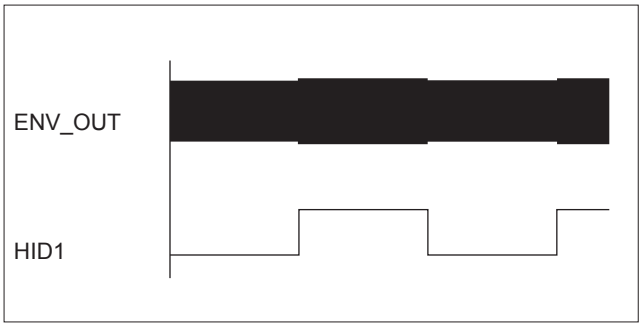

Fig.3-4-1

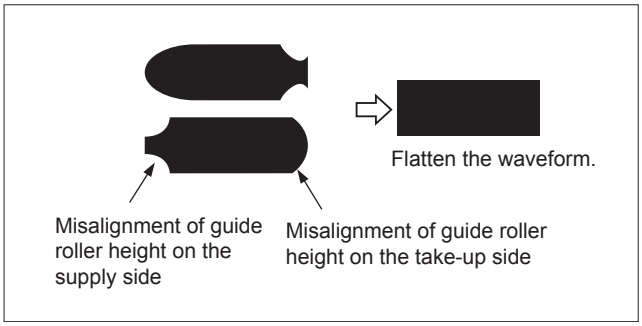

Fig.3-4-2

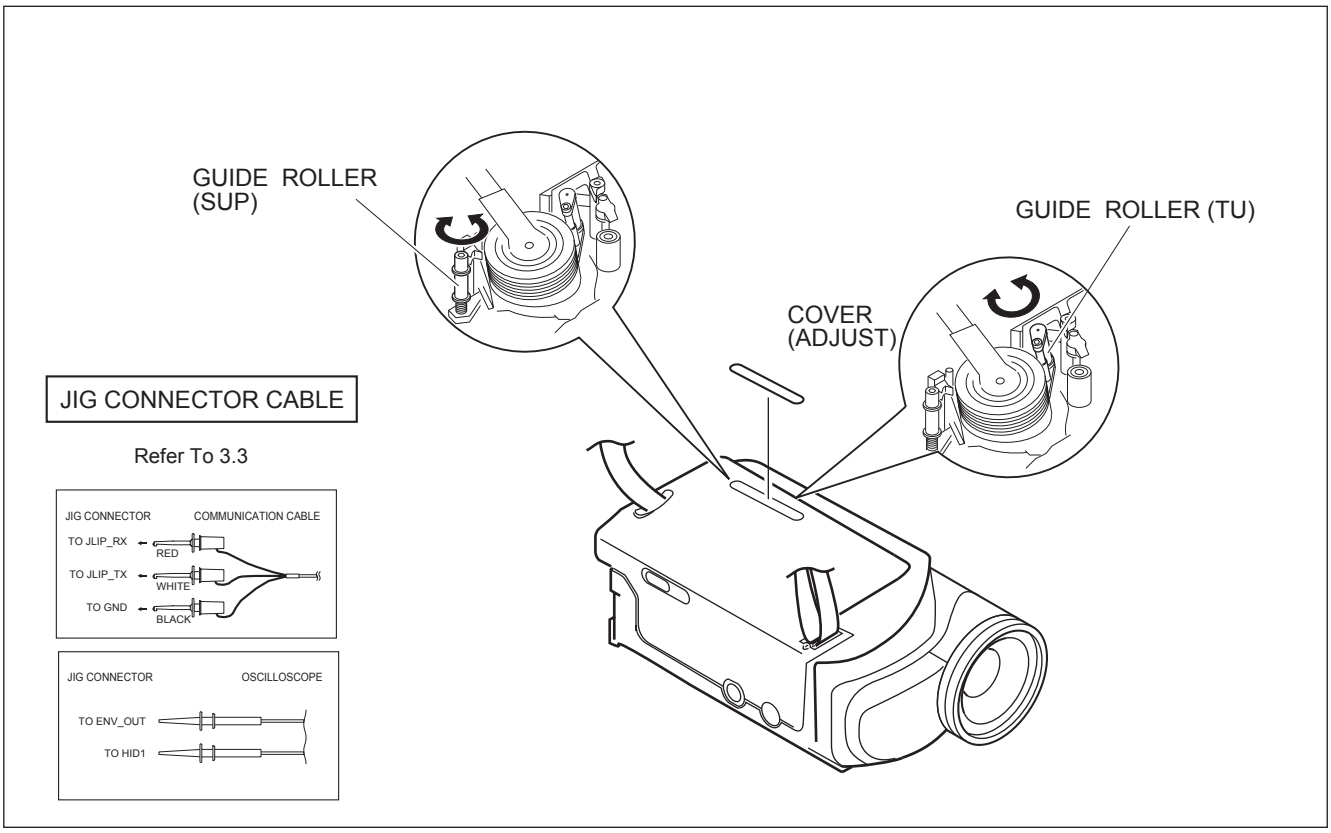

Fig.3-4-3

3.5 ELECTRICAL ADJUSTMENT

3.5.1 Electrical adjustment with personal computer

- Electrical adjustmentis performed by using PERSONAL COMPUTER. As for the connection of cables, see Fig. 3-5-1. Read RE-ADME.TXT file to use the software for SERVICE SUPPORT SYSTEM properly.
- Remove the COVER (JIG) to perform adjustment.

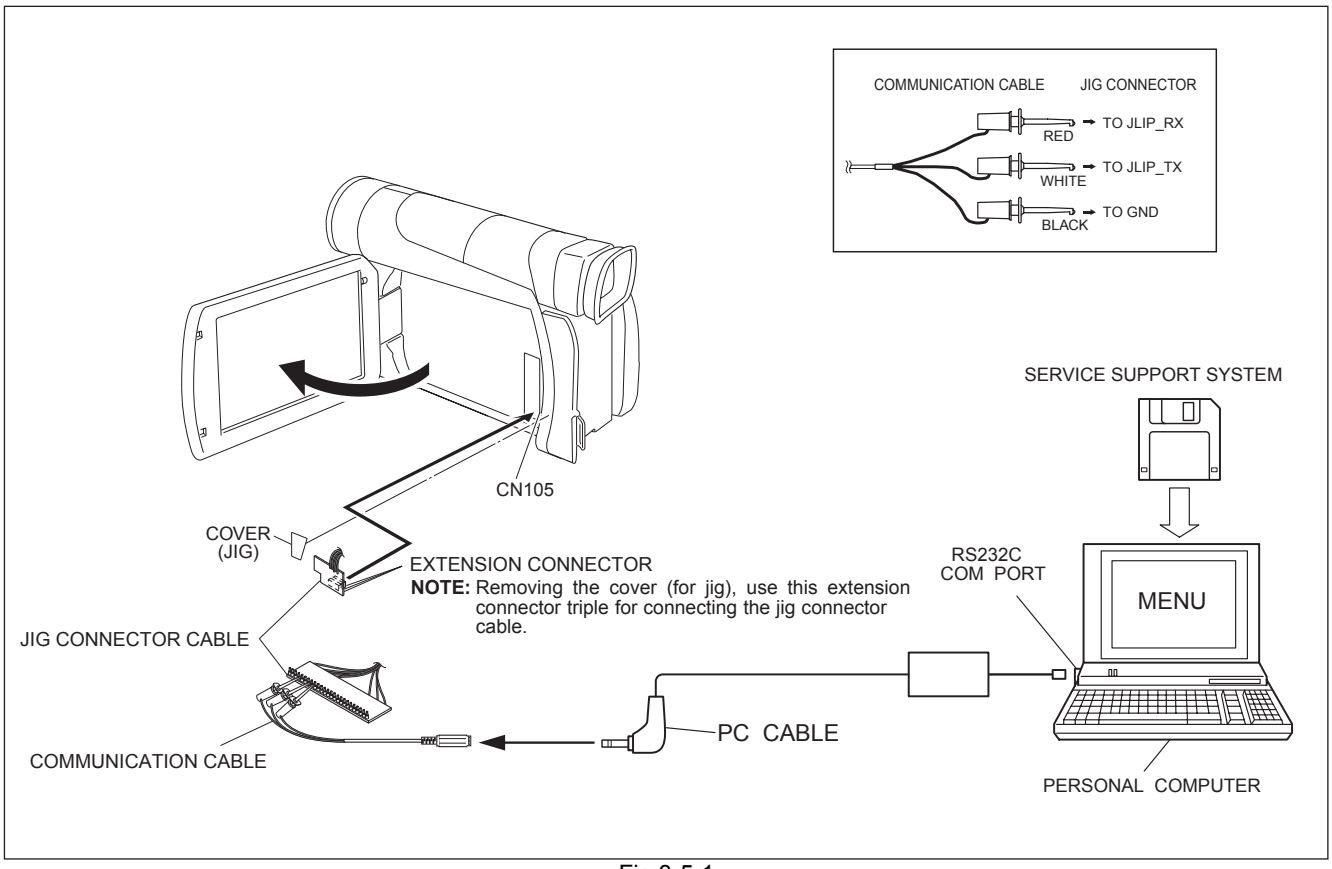

Fig.3-5-1

JVC
VICTOR COMPANY OF JAPAN, LIMITED
AV & MULTIMEDIA COMPANY CAMCORDER CATEGORY 12, 3-chome, Moriya-cho, kanagawa-ku, Yokohama, kanagawa-prefecture, 221-8528, Japan

(No.86733)

Printed in Japan
200304WPC

JVC

SCHEMATIC DIAGRAMS

DIGITAL VIDEO CAMERA

GR-D70EK,GR-D70EX, GR-D70EY,GR-D70EZ

CD-ROM No.SML200305

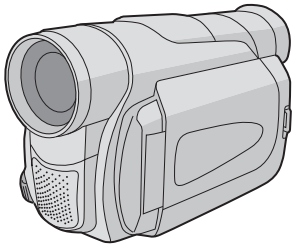

Mini DV PAL

DSC DIGITAL STILL CAMERA

For disassembling and assembling of MECHANISM ASSEMBLY, refer to the SERVICE MANUAL No.86700 (MECHANISM ASSEMBLY).

SPECIFICATION

Camcorder

General

Power supply	: DC 11.0 V ⎓ (Using AC Adapter) DC 7.2 V ⎓ (Using battery pack)
Power consumption	
LCD monitor off, viewfinder on	: Approx. 3.4 W
LCD monitor on, viewfinder off	: Approx. 4.7 W
Dimensions (W x H x D)	: 69 mm x 94 mm x 143 mm (with the LCD monitor closed and the viewfinder pushed back in)
Weight	: Approx. 525 g
Operating temperature	: 0°C to 40°C
Operating humidity	: 35% to 80%
Storage temperature	: -20°C to 50°C
Pickup	: 1/6" CCD
Lens	: F 1.6, f = 2.7 mm to 43.2 mm, 16:1 power zoom lens
Filter diameter	: Ø37 mm
LCD monitor	: 2.5" diagonally measured, LCD panel/TFT active matrix system
Viewfinder	: Electronic viewfinder with 0.24" black/white LCD
Speaker	: Monaural

Digital Video Camera

Format	: DV format (SD mode)
Signal format	: PAL standard
Recording/Playback format	: Video: Digital component recording : Audio: PCM digital recording, 32 kHz 4-channel (12-bit), 48 kHz 2-channel (16-bit)
Cassette	: Mini DV cassette
Tape speed	: SP : 18.8 mm/s LP : 12.5 mm/s
Maximum recording time (using 80 min. cassette)	: SP : 80 min. LP : 120 min.

Digital Still Camera Function

Storage media	: SD Memory Card/MultiMediaCard
Compression system	: JPEG (compatible)
File size	: 2 modes (1024 x 768 pixels, 640 x 480 pixels)
Picture quality	: 2 modes (FINE/STANDARD)
Approximate number of storable images	: pg. 18.

Connectors

S-Video	
Output	: Y : 1 V (p-p), 75Ω, analogue C : 0.29 V (p-p), 75Ω, analogue
Input*	: Y : 0.8 V (p-p) -1.2 V (p-p), 75Ω, analogue C : 0.2 V (p-p) -0.4 V (p-p), 75Ω , analogue
AV	
Video output	: 1 V (p-p), 75 , analogue
Video input*	: 0.8 V (p-p) -1.2 V (p-p), 75Ω, analogue
Audio output	: 300 mV (rms), 1 kΩ, analogue, stereo
Audio input*	: 300 mV (rms), 50 kΩ, analogue, stereo
DV	
Output	: 4-pin, IEEE 1394 compliant
Input	: 4-pin, IEEE 1394 compliant
USB*	: 5-pin
EDIT	: Ø3.5 mm, 2-pole

* GR-D70 only

AC Adapter

Power requirement	: AC 110 V to 240 V ~, 50 Hz/60 Hz
Output	: DC 11 V ⎓, 1 A

Specifications shown are for SP mode unless otherwise indicated. E & O.E. Design and specifications subject to change without notice.

GR-D70EK,GR-D70EX,GR-D70EY,GR-D70EZ M3D127

COPYRIGHT © 2003 VICTOR COMPANY OF JAPAN, LTD.

No.86733SCH
2003/04

CHARTS AND DIAGRAMS

NOTES OF SCHEMATIC DIAGRAM

Safety precautions
The Components identified by the symbol ⚠ are critical for safety. For continued safety, replace safety critical components only with manufacturer's recommended parts.

1. Units of components on the schematic diagram

Unless otherwise specified.

1) All resistance values are in ohm. 1/6 W, 1/8 W (refer to parts list).
   Chip resistors are 1/16 W.
   K: KΩ (1000Ω), M: MΩ (1000KΩ)
2) All capacitance values are in µF, (P: PF).
3) All inductance values are in µH, (m: mH).
4) All diodes are 1SS133, MA165 or 1N4148M (refer to parts list).

Note: The Parts Number, value and rated voltage etc. in the Schematic Diagram are for references only. When replacing the parts, refer to the Parts List.

2. Indications of control voltage

AUX : Active at high.

$\overline{\text{AUX}}$ or AUX(L) : Active at low.

3. Interpreting Connector indications

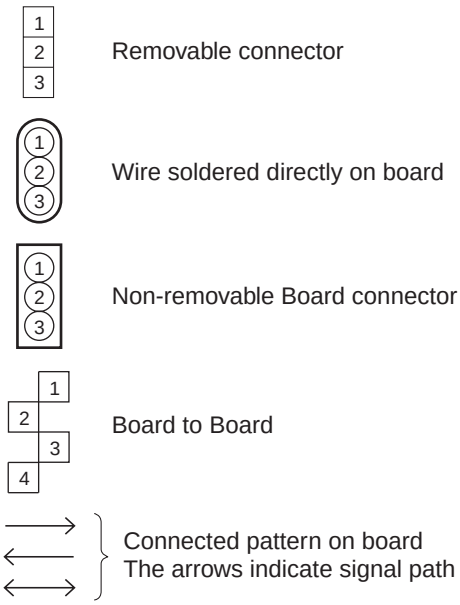

Note: For the destination of each signal and further line connections that are cut off from the diagram, refer to "BOARD INTERCONNECTIONS"

4. Voltage measurement

1) Regulator (DC/DC CONV) circuits
   REC : Colour bar signal.
   PB : Alignment tape (Colour bar).
   — : Unmeasurable or unnecessary to measure.
4) Indication on schematic diagram
   Voltage Indications for REC and PB mode on the schematic diagram are as shown below.

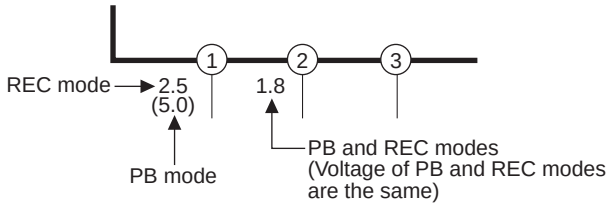

Note: If the voltages are not indicated on the schematic diagram, refer to the voltage charts.

5. Signal path Symbols

The arrows indicate the signal path as follows.

NOTE : The arrow is DVC unique object.

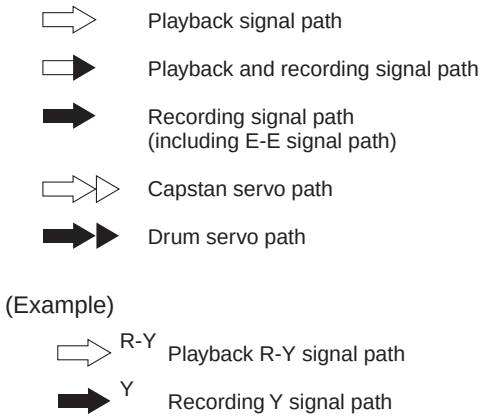

6. Indication of the parts for adjustments

The parts for the adjustments are surrounded with the circle as shown below.

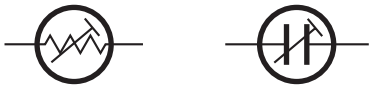

7. Indication of the parts not mounted on the circuit board

"OPEN" is indicated by the parts not mounted on the circuit board.

CIRCUIT BOARD NOTES

1. Foil and Component sides

1) Foil side (B side) :
   Parts on the foil side seen from foil face (pattern face) are indicated.
2) Component side (A side) :
   Parts on the component side seen from component face (parts face) indicated.

2. Parts location guides

Parts location are indicated by guide scale on the circuit board.

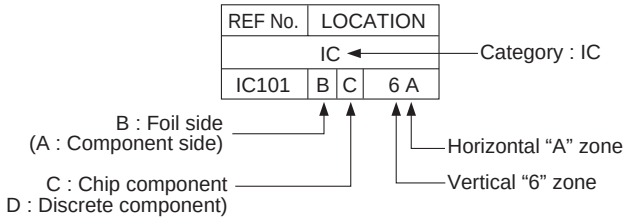

Note: For general information in service manual, please refer to the Service Manual of GENERAL INFORMATION Edition 4 No. 82054D (January 1994).

■ BOARD INTERCONNECTIONS

NOTE):The number of patch cords are indicated by inter connected.*

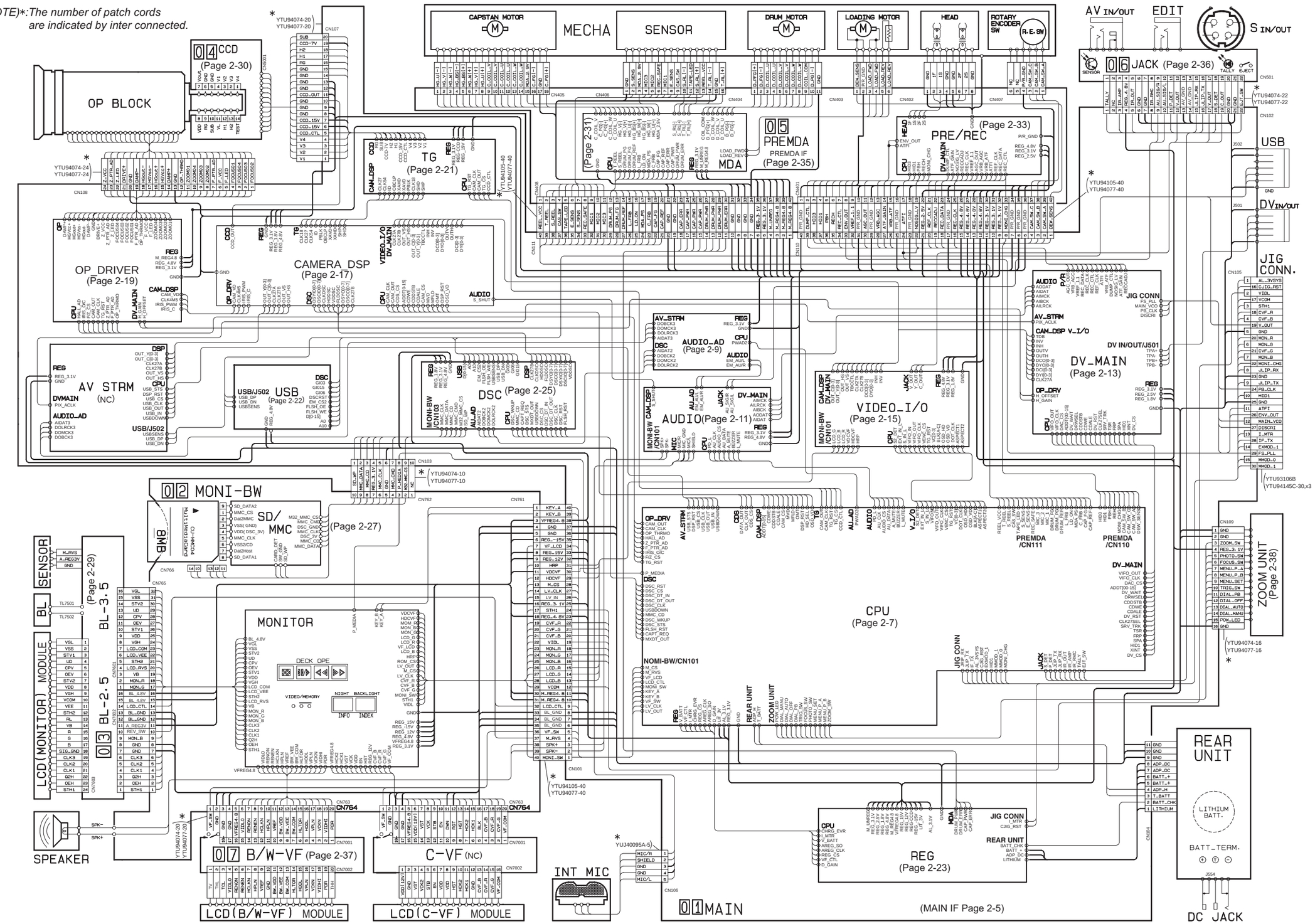

y10331001a_rev0.1

■ MAIN IF SCHEMATIC DIAGRAM

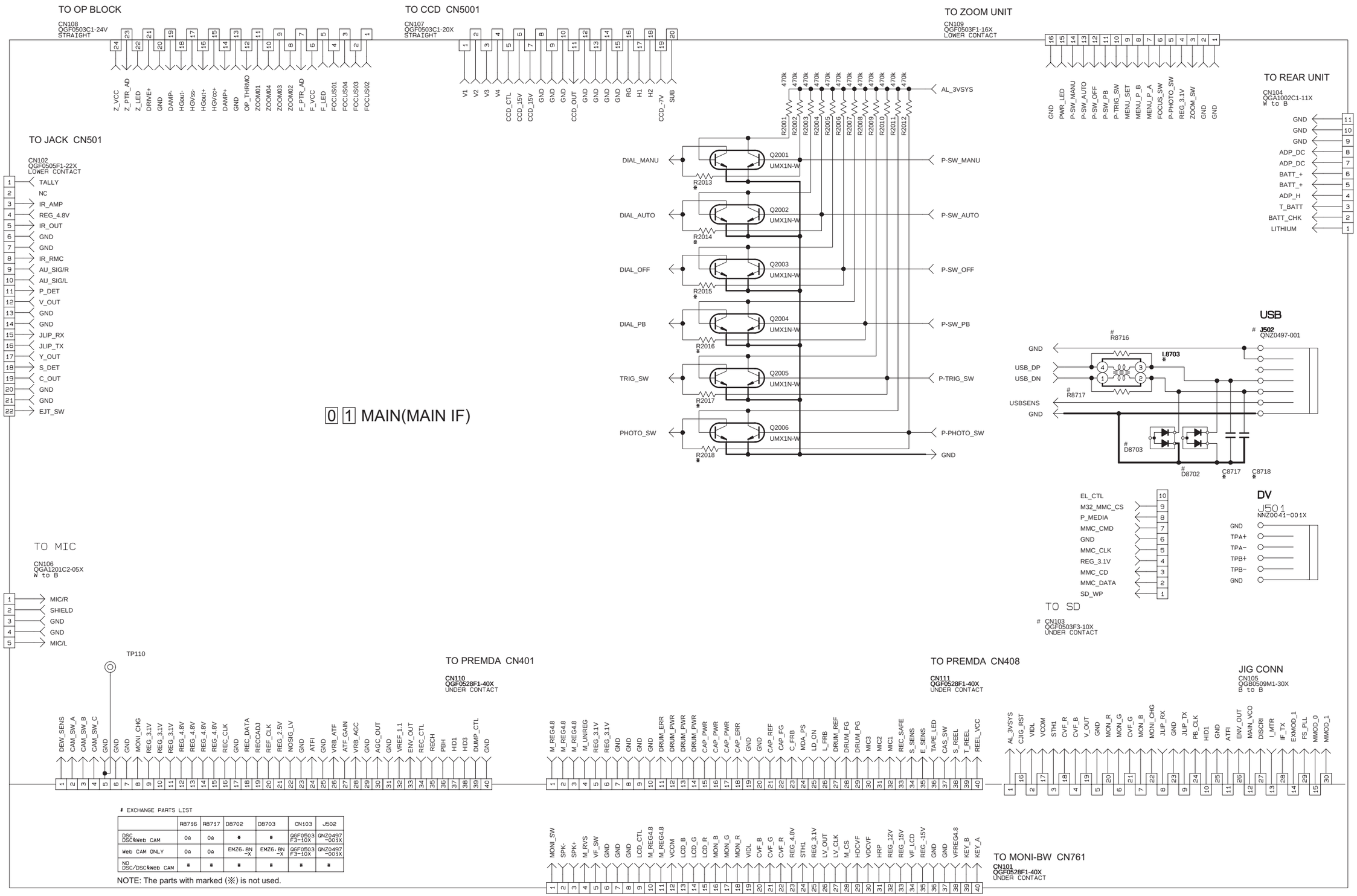

EXCHANGE PARTS LIST

	R8716	R8717	D8702	D8703	CN103	J502
DSC DSC&Web CAM	0Ω	0Ω	*	*	QGF0503 F3-10X	QNZ0497 -001X
Web CAM ONLY	0Ω	0Ω	EMZ6.8N -X	EMZ6.8N -X	QGF0503 F3-10X	QNZ0497 -001X
NO DSC/DSC&Web CAM	*	*	*	*	*	*

NOTE: The parts with marked (※) is not used.

■ CPU SCHEMATIC DIAGRAM

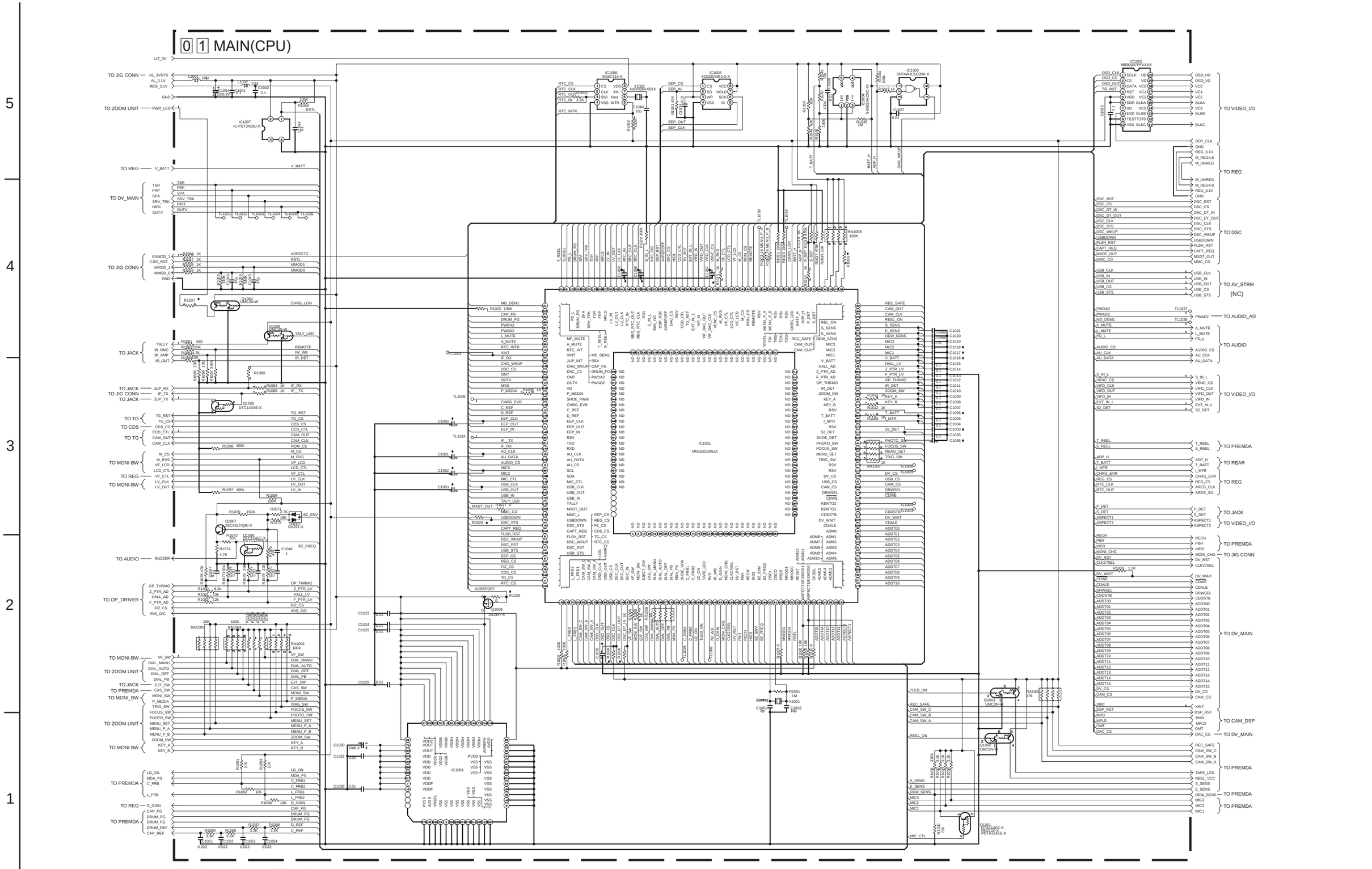

NOTE: The parts with marked (※) is not used.

p10332001a_rev0.1

■ AUDIO_AD SCHEMATIC DIAGRAM

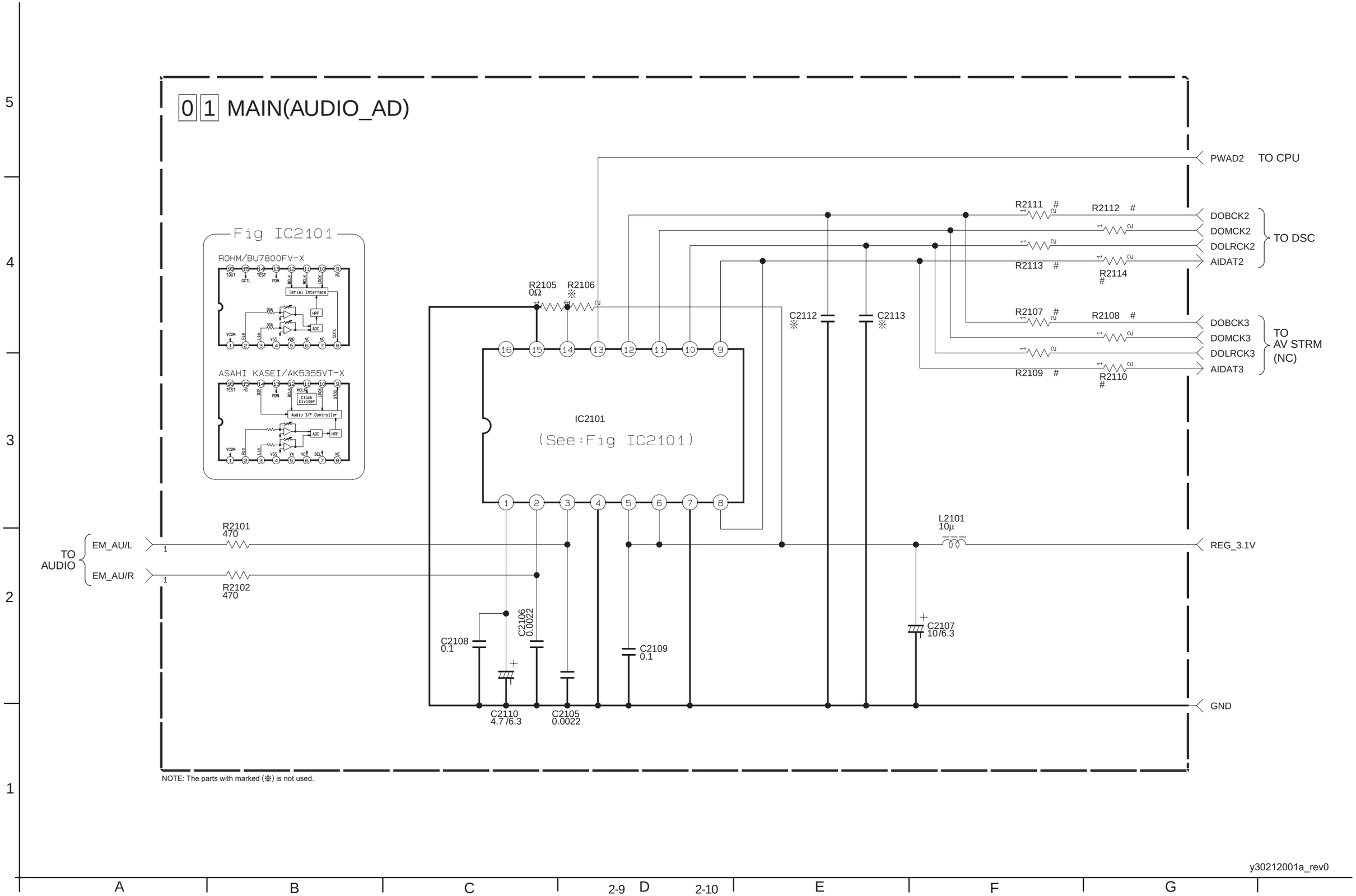

NOTE: The parts with marked (※) is not used.

■ AUDIO SCHEMATIC DIAGRAM

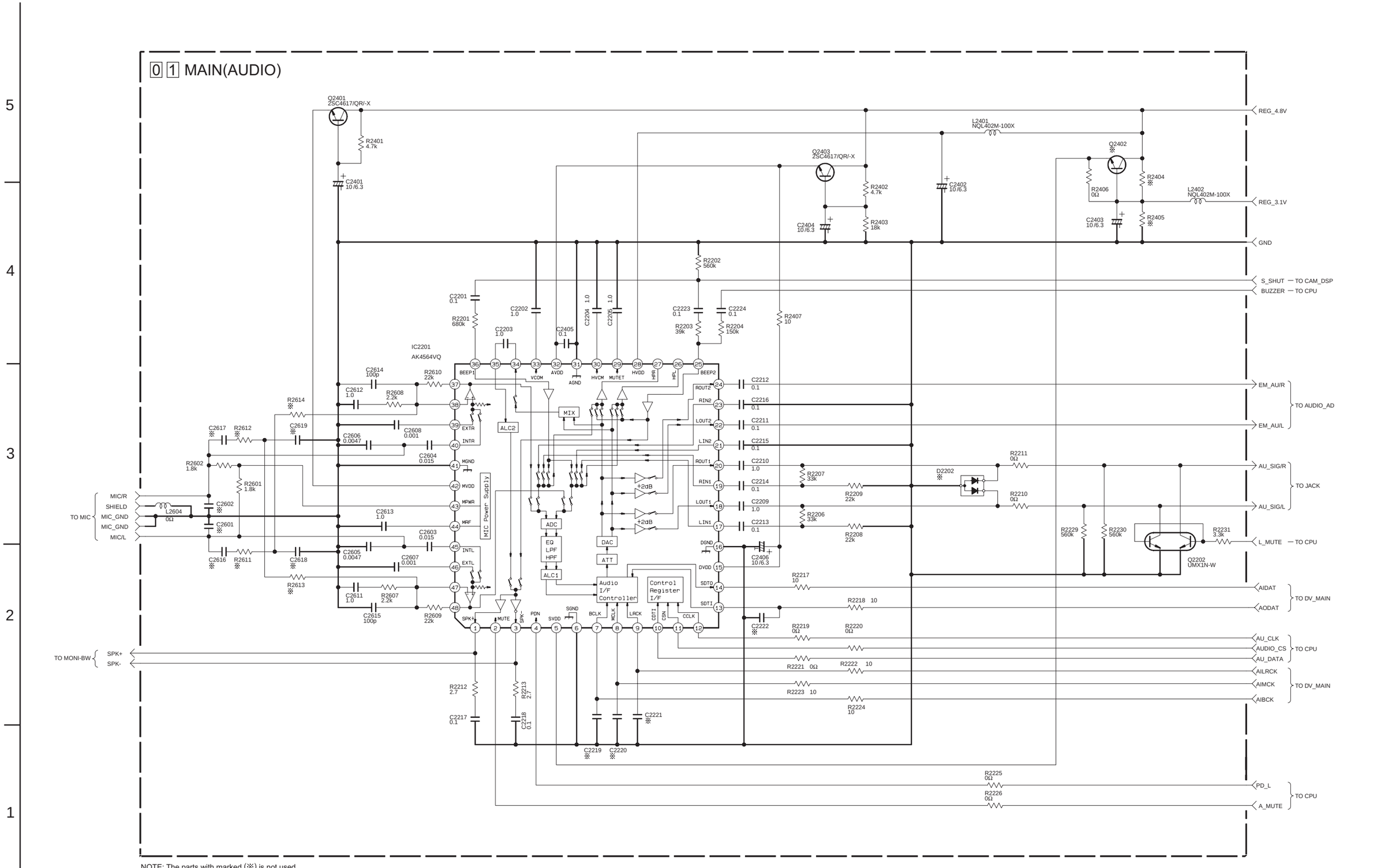

NOTE: The parts with marked (※) is not used.

p20233001a_rev0.1

■ DV_MAIN SCHEMATIC DIAGRAM

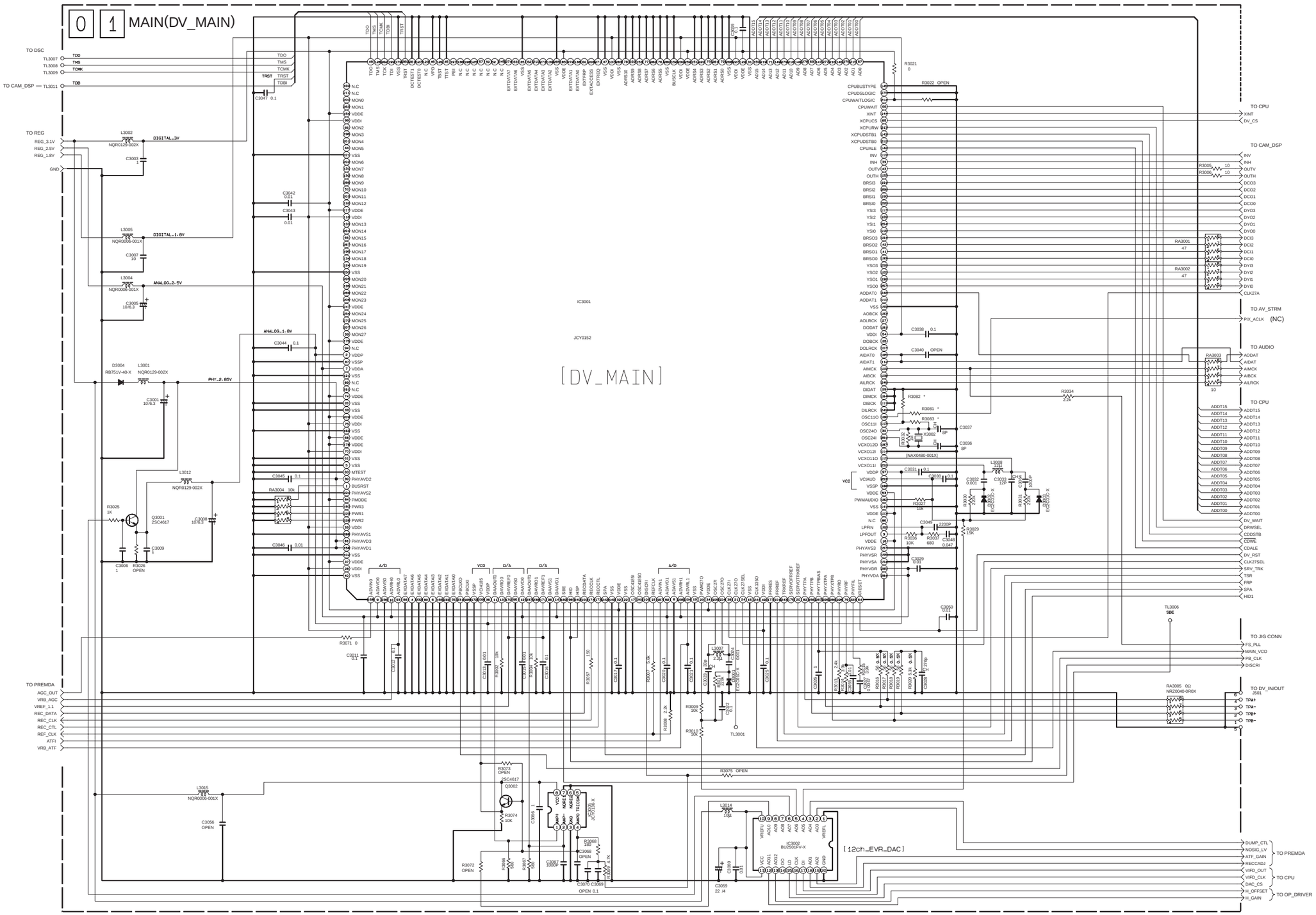

DIFFERENT PARTS LIST

	R3081	R3082	R3083
NON_PIX	OPEN	0Ω	OPEN
PIXELA	470Ω	OPEN	0Ω

NOTE: The parts with marked (*) is not used.

y10333001a_rev0.1

■ VIDEO I/O SCHEMATIC DIAGRAM

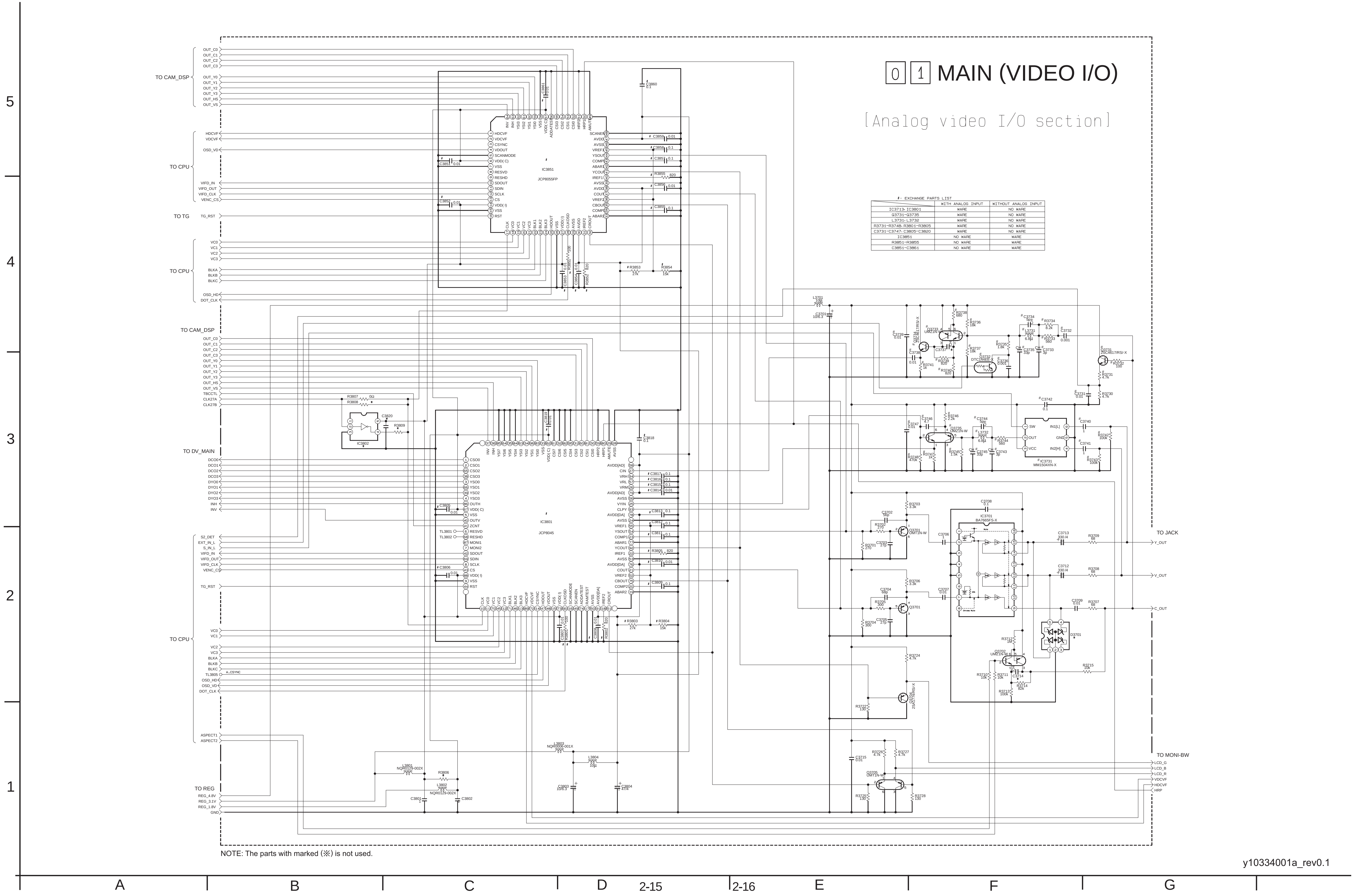

#: EXCHANGE PARTS LIST

	WITH ANALOG INPUT	WITHOUT ANALOG INPUT
IC3713, IC3801	WARE	NO WARE
Q3731–Q3735	WARE	NO WARE
L3731, L3732	WARE	NO WARE
R3731–R3748, R3801–R3805	WARE	NO WARE
C3731–C3747, C3805–C3820	WARE	NO WARE
IC3851	NO WARE	WARE
R3851–R3855	NO WARE	WARE
C3851–C3861	NO WARE	WARE

NOTE: The parts with marked (※) is not used.

y10334001a_rev0.1

■ CAMERA DSP SCHEMATIC DIAGRAM

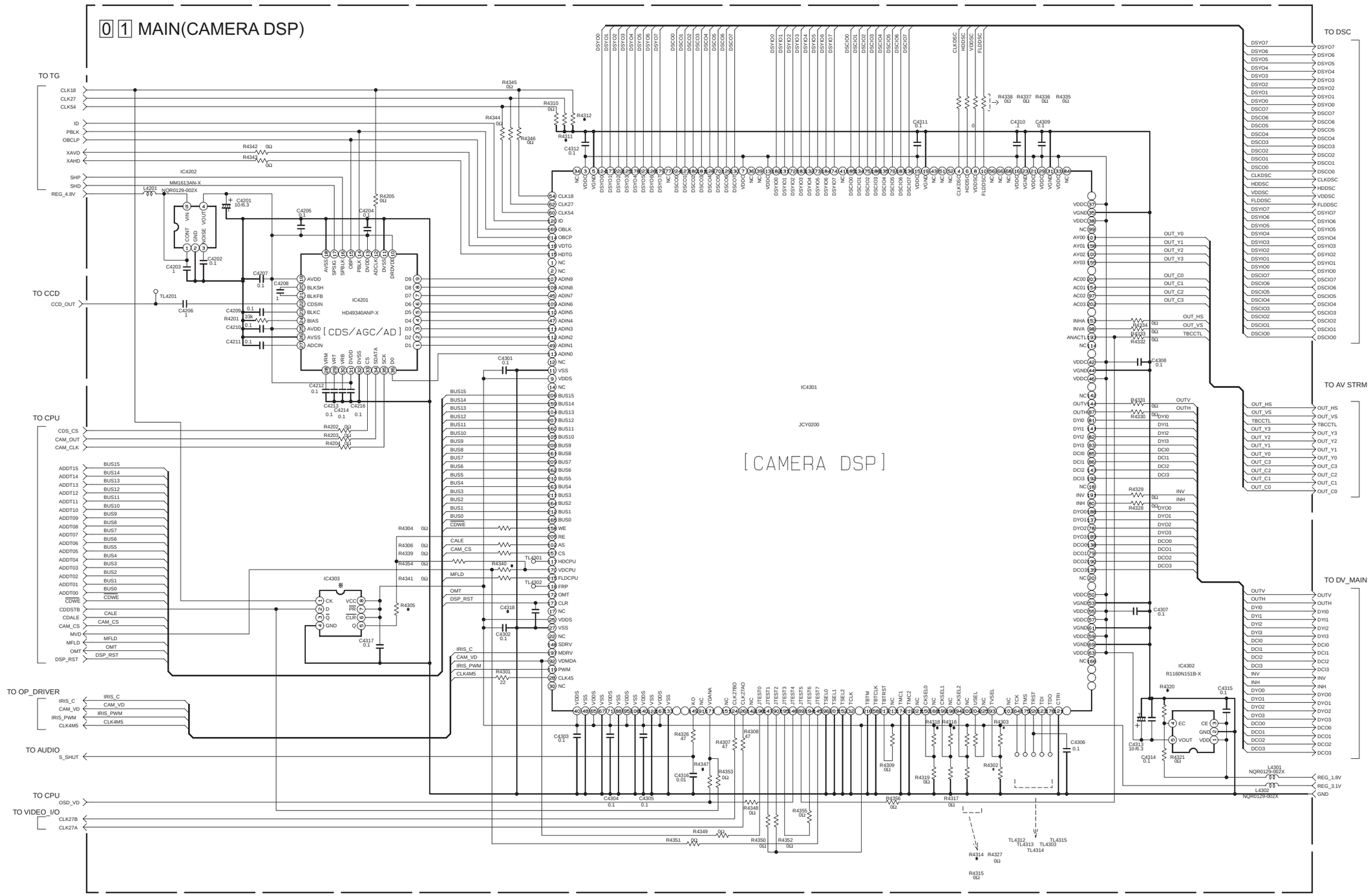

	R4302	R4303
NTSC	0 Ω	※
PAL	※	0 Ω

NOTE: The parts with marked (※) is not used.

y10335001a_rev0.1

■ OP DRIVER SCHEMATIC DIAGRAM

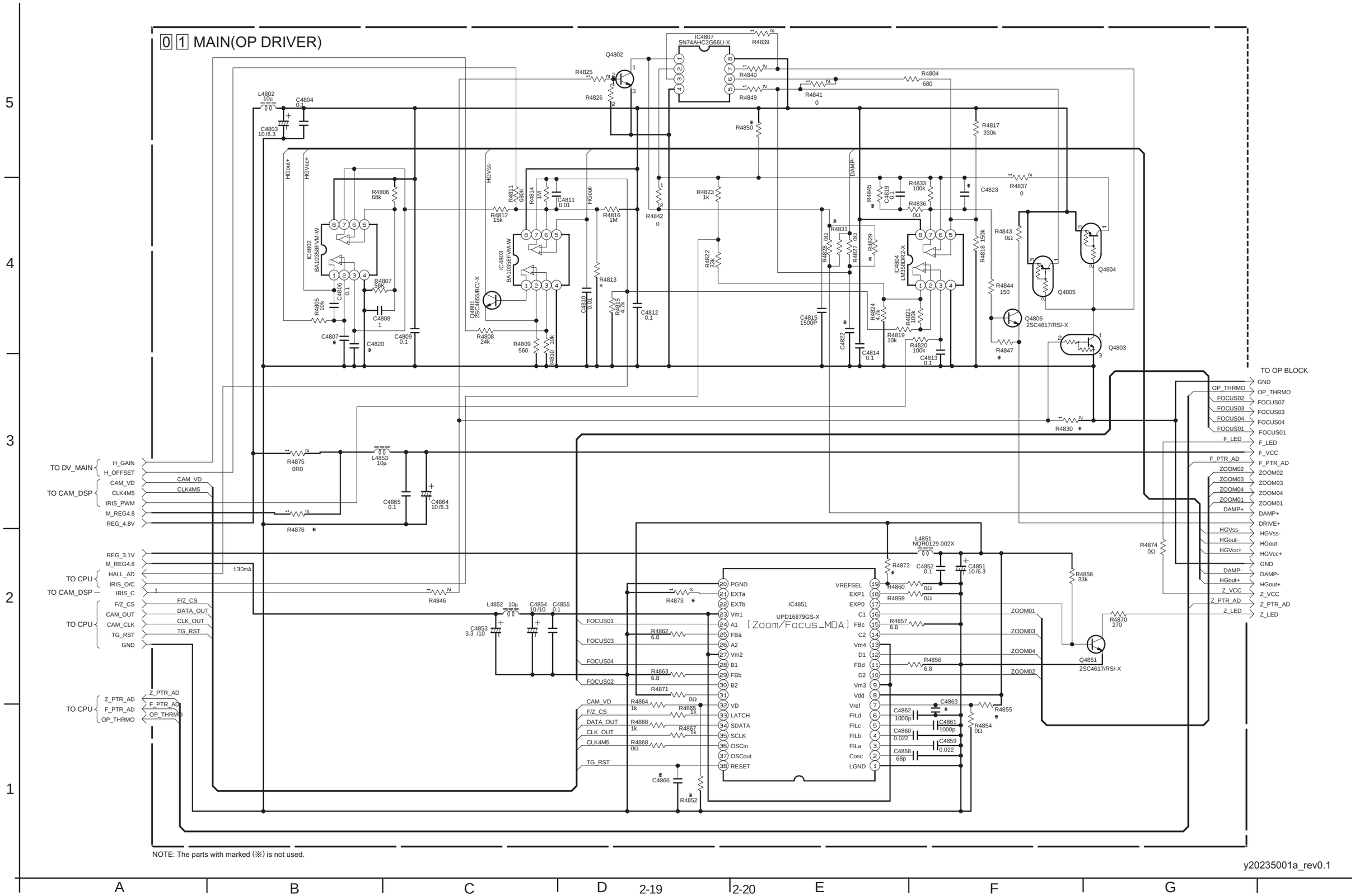

■ TG SCHEMATIC DIAGRAM

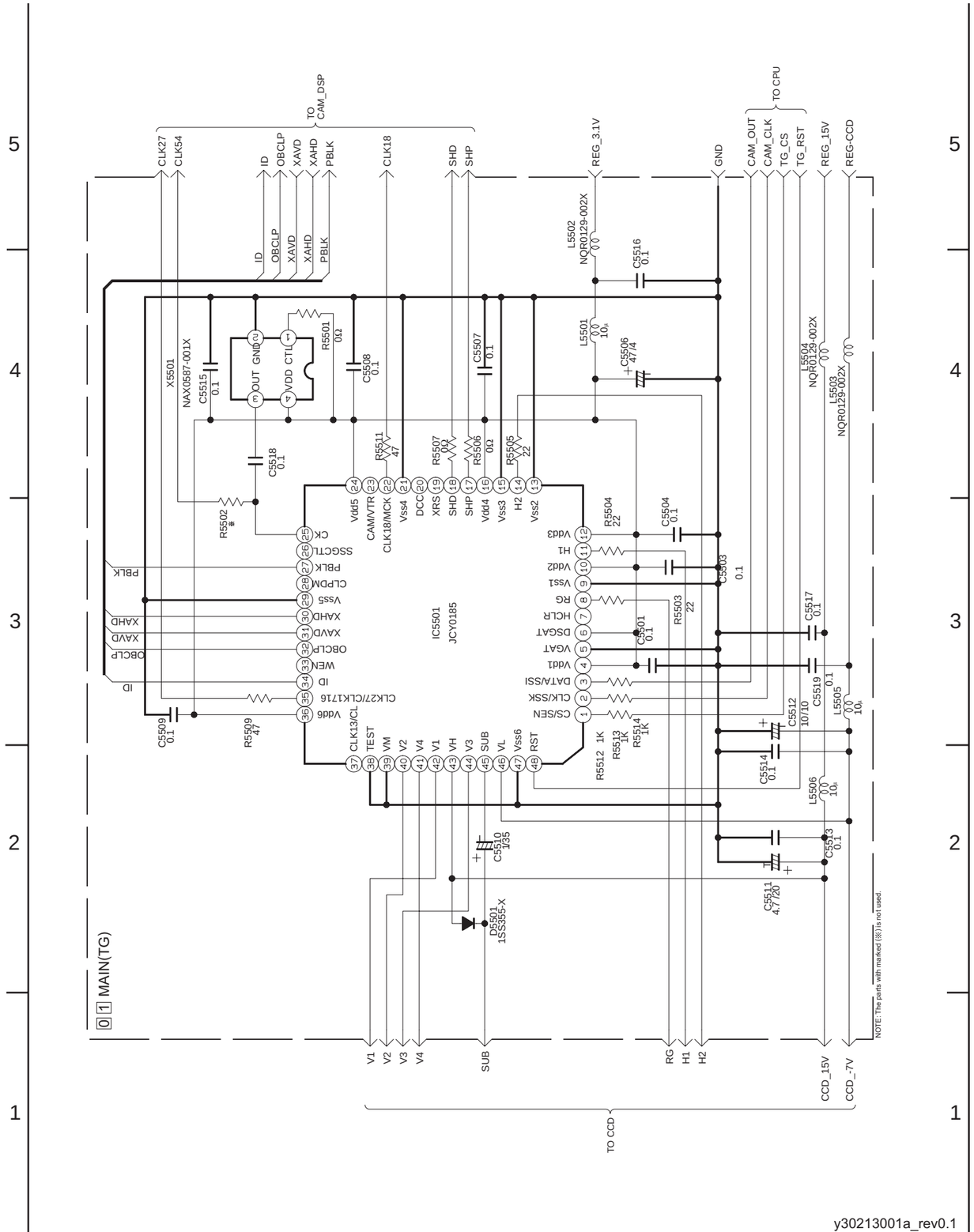

■ USB SCHEMATIC DIAGRAM

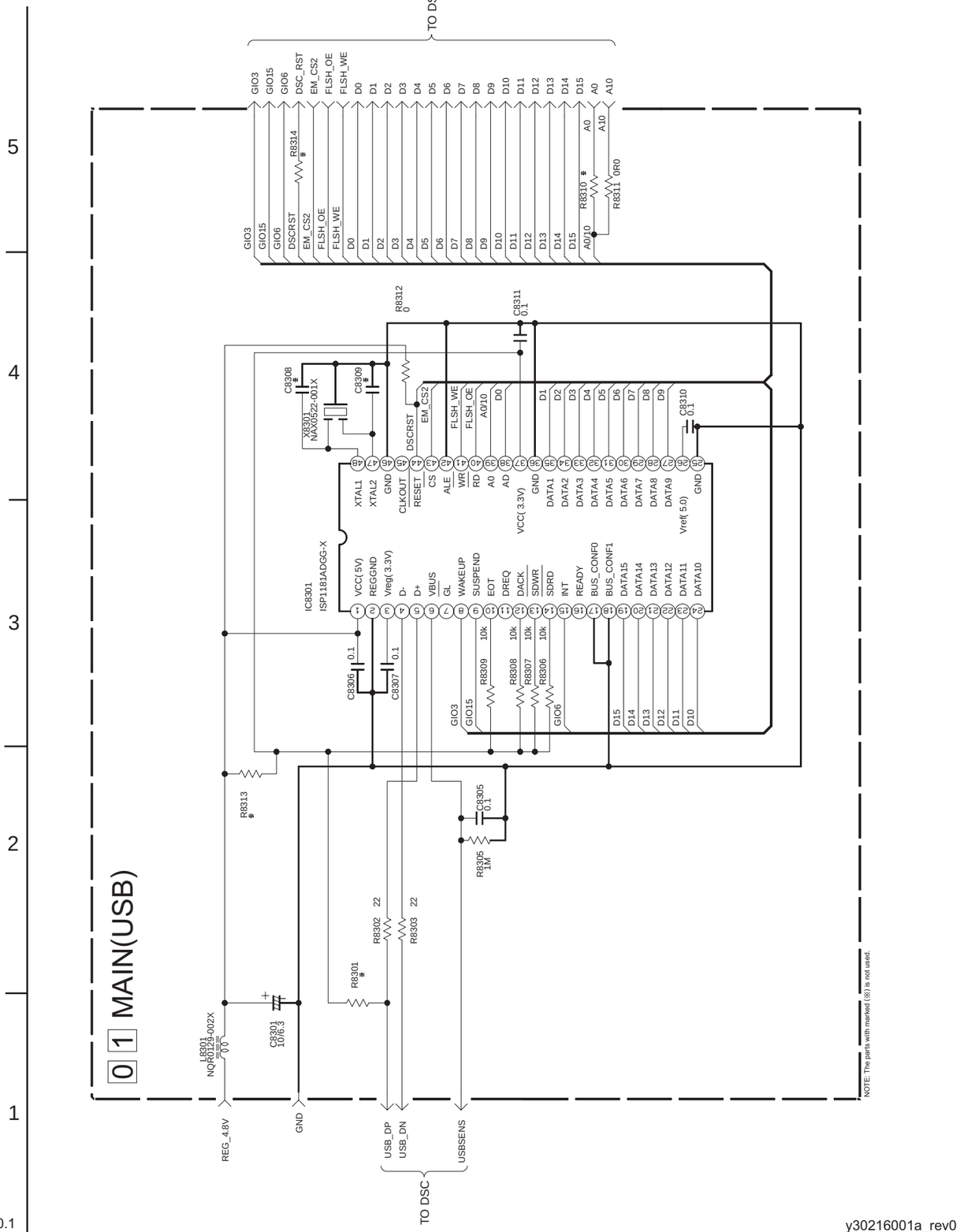

■ REG SCHEMATIC DIAGRAM

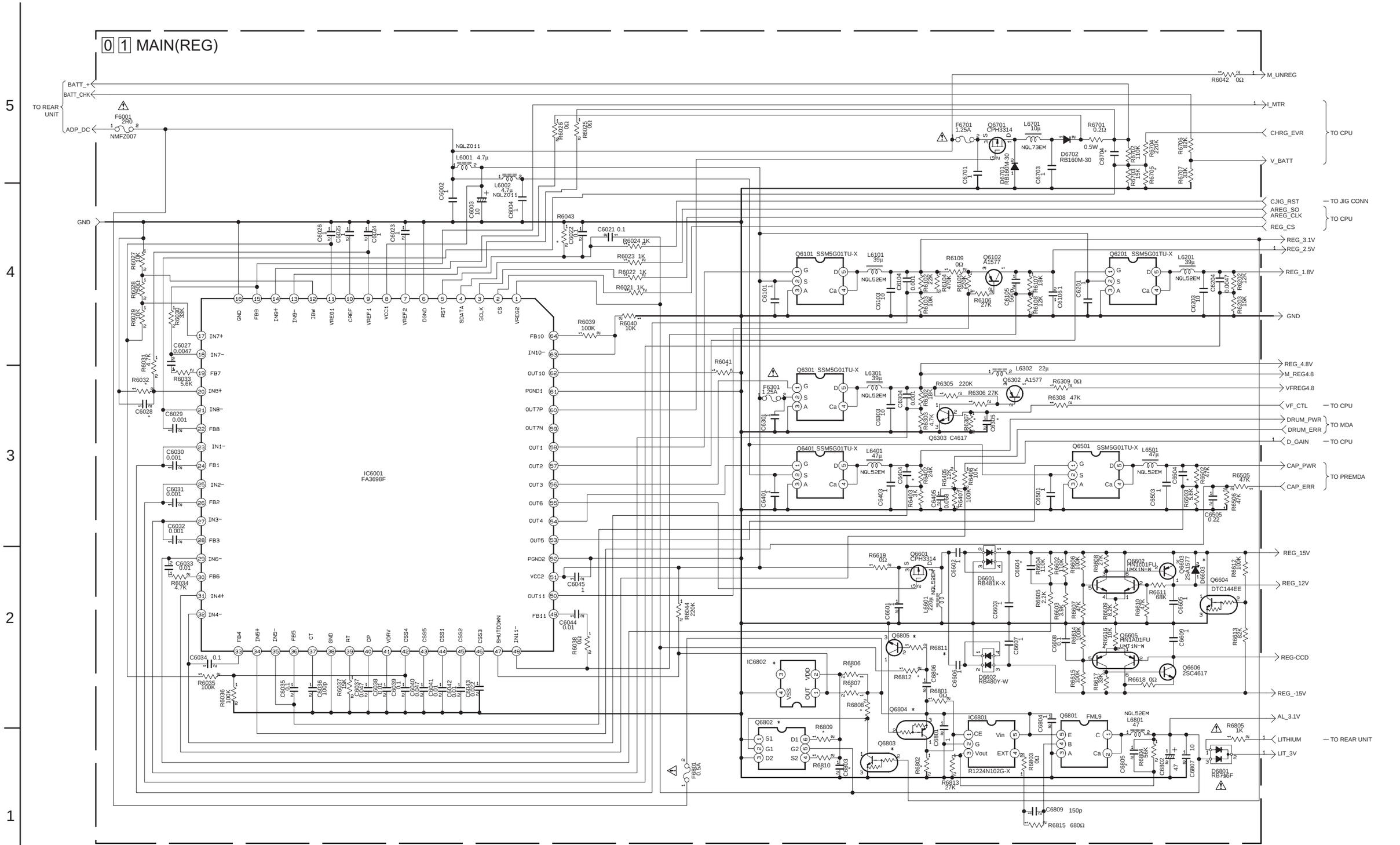
0 1 MAIN(REG)
TO REAR UNIT
BATT_+
BATT_CHK
ADP_DC
F6001 2R0
NMFZ007
GND
IC6001 FA3698F
M_UNREG
I_MTR
CHRG_EVR
V_BATT
TO CPU
CJIG_RST
AREG_SO
AREG_CLK
REG_CS
TO JIG CONN
REG_3.1V
REG_2.5V
REG_1.8V
REG_4.8V
M_REG4.8
VFREG4.8
VF_CTL
DRUM_PWR
DRUM_ERR
TO MDA
D_GAIN
CAP_PWR
CAP_ERR
TO PREMDA
REG_15V
REG_12V
REG-CCD
REG_-15V
AL_3.1V
LITHIUM
LIT_3V
TO REAR UNIT
Q6101 SSM5G01TU-X
Q6201 SSM5G01TU-X
Q6301 SSM5G01TU-X
Q6401 SSM5G01TU-X
Q6501 SSM5G01TU-X
Q6102 A1577
Q6302 A1577
Q6303 C4617
Q6601 CPH3314
Q6602 HN1C01FU
Q6603 2SC4617
Q6604 DTC144EE
Q6605 HN1A01FU
Q6606 2SC4617
Q6701 CPH3314
Q6801 FML9
IC6801 R1224N102G-X
IC6802
D6601 RB481K-X
D6602 RB480Y-W
D6701 RB160M-30
D6702 RB160M-30
D6801 RB715F
F6701 1.25A
F6301 1.25A
F6901 0.5A
L6001 4.7μ
L6002 4.7μ
L6101 39μ
L6201 39μ
L6301 39μ
L6302 22μ
L6401 47μ
L6501 47μ
L6601 220μ
L6701 10μ
L6801 47
NQLZ011
NQL73EM
NQL52EM
R6042 0Ω
R6701 0.2Ω
R6109 0Ω
R6305 220K
R6306 27K
R6309 0Ω
R6308 47K
R6619 0Ω
R6811
R6812
R6806
R6807
R6808
R6809
R6810
R6813 27K
R6803 0Ω
R6802
R6805 1K
R6815 680Ω
C6809 150p
R6039 100K
R6040 10K
R6041
R6043
R6044 220K
C6045 1
C6044 0.01
C6038 0.01
C6039 0.01
C6040 0.01
C6041 0.01
C6042 0.01
C6043 0.01
C6034 0.1
R6035 100K
R6036 100K
C6027 0.0047
R6032
R6033 5.6K
C6028
C6029 0.001
C6030 0.001
C6031 0.001
C6032 0.001
C6033 0.01
R6034 4.7K
C6021 0.1
R6024 1K
R6023 1K
R6022 1K
R6021 1K
R6026 0Ω
R6025 0Ω
C6002
C6003 10
C6004
C6026
C6025
C6024
C6023
C6022
C6101 1
C6103 10
C6104
C6105 560p
C6106 27K
C6107 1K
C6108 1K
C6109 1
C6201
C6203 10
C6204
C6301
C6303 10
C6304
C6305
C6401
C6403
C6404
C6405 0.068
C6501
C6503 1
C6504
C6505 0.22
C6601
C6602
C6603
C6604
C6605
C6606
C6607
C6608
C6609 1
C6701 1
C6703 1
C6704
C6801
C6802 47
C6803
C6804
C6805
C6807 10
C6901
R6101 33K
R6102 22K
R6103 10K
R6104 470K
R6105 220K
R6107 1K
R6108 12K
R6201 33K
R6202 12K
R6203 15K
R6301 33K
R6302 18K
R6303 4.7K
R6304 470K
R6307
R6401 3K
R6402 24K
R6405 12K
R6406 100K
R6407 10K
R6501 33K
R6502 47K
R6503 5.6K
R6504 47K
R6505 47K
R6506 47K
R6601 33K
R6602 47K
R6603 3.9K
R6604 110K
R6605 2.2K
R6606 100K
R6607 47K
R6608 100K
R6609 8.2K
R6610 4.7K
R6611 68K
R6612 100K
R6613 82K
R6614 100K
R6615 100K
R6616 10K
R6617 33K
R6618 0Ω
R6701 33K
R6702 82K
R6703 33K
R6704 220K
R6705
R6706 82K
R6707 33K
R6708 27K
R6709 27K
R6710 27K
R6711 27K
R6712 27K
R6713 27K
R6714 27K
R6715 27K
R6716 27K
R6717 27K
R6718 27K
R6719 27K
R6720 27K
R6721 27K
R6722 27K
R6723 27K
R6724 27K
R6725 27K
R6726 27K
R6727 27K

■ DSC SCHEMATIC DIAGRAM

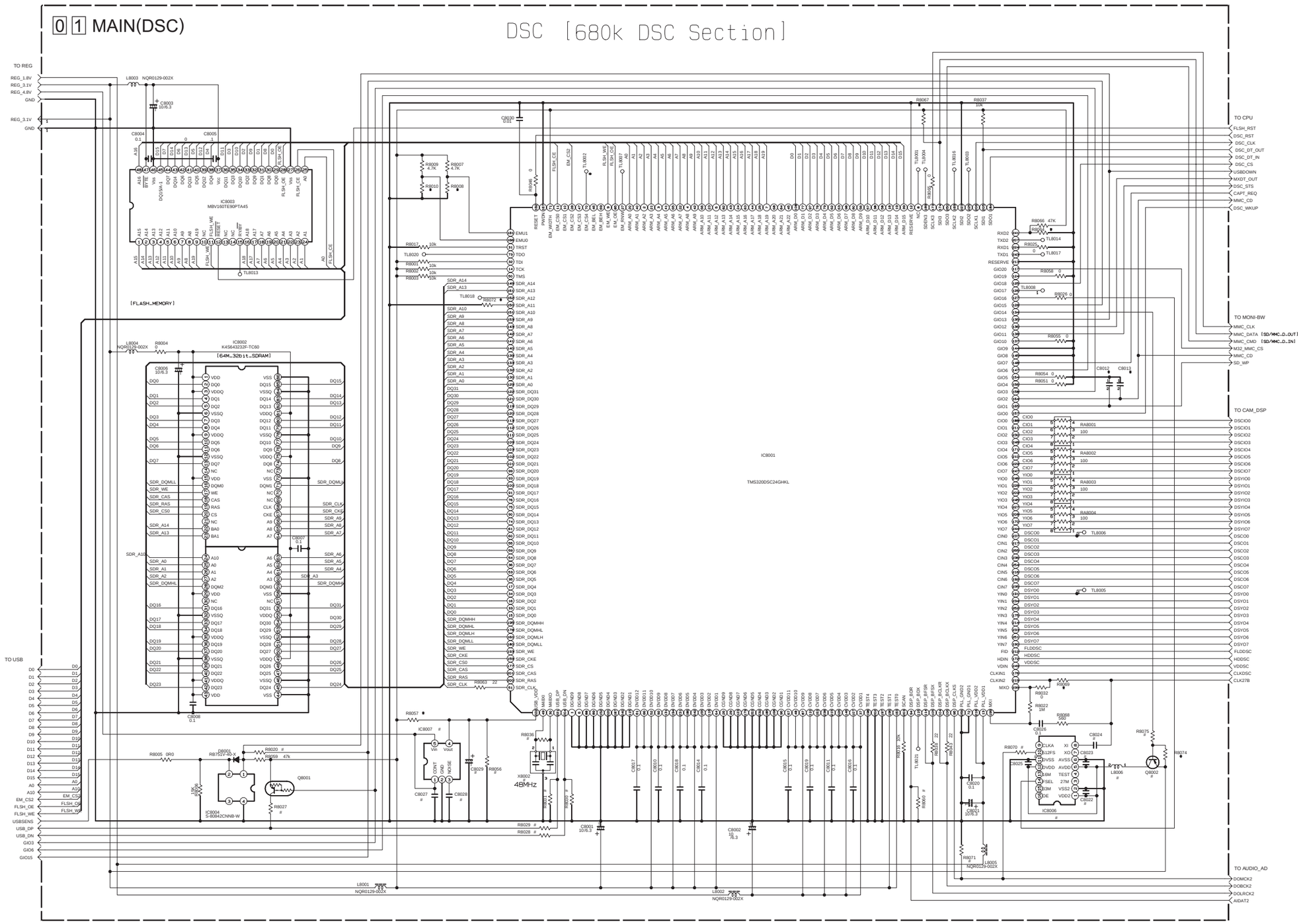

EXCANGE PARTS LIST

SYMBOL No. / MODEL	IC8006	IC8007	X8002	Q8001	Q8002	L8006	R8020	R8027	R8028	R8029	R8030	R8031	R8036	R8056	R8060	R8070	R8071	R8074	R8075	C8022	C8023	C8024	C8025	C8027	C8028	C8029
ONLY DSC	●	MM1613DN -X	NAX0398 -001X	DTA114EE -X	●	●	0Ω	1.5kΩ	22Ω	22Ω	1MΩ	1MΩ	1MΩ	●	0Ω	●	0Ω	●	●	●	●	●	●	1μF	0.1μF	10μF /6.3V
WEB CAM	BU2288FV -X	●	●	●	2SA1774 /QR/ -X	NQR0129 -002X	●	●	●	●	0Ω	0Ω	●	0Ω	●	22Ω	●	47kΩ	1kΩ	0.1μF	0.1μF	0.1μF	0.1μF	●	●	●

NOTE: The parts with marked (※) is not used.

y10339001a_rev0.1

■ MONI-BW SCHEMATIC DIAGRAM

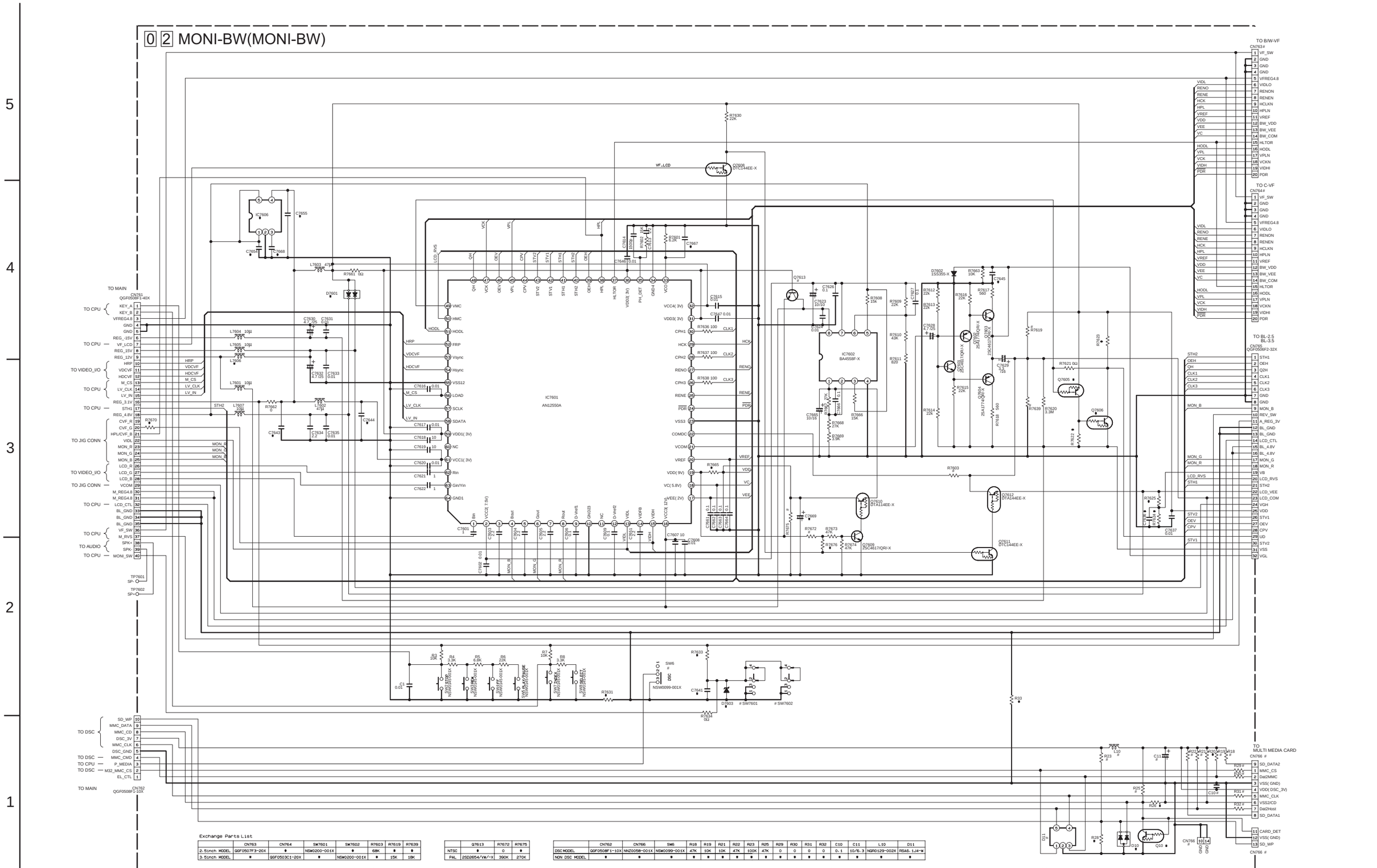

	CN763	CN764	SW7601	SW7602	R7603	R7619	R7639
2.5inch MODEL	QGF0507F3-20X	*	NSW0200-001X	*	68K	*	*
3.5inch MODEL	*	QGF0503C1-20X	*	NSW0200-001X	*	15K	18K

	Q7613	R7672	R7675
NTSC	*	0	*
PAL	2SD2654/YW/-X	390K	270K

	CN762	CN766	SW6	R18	R19	R21	R22	R23	R25	R29	R30	R31	R32	C10	C11	L10	D11
DSC MODEL	QGF0508F1-10X	NNZ0058-001X	NSW0099-001X	47K	10K	10K	47K	100K	47K	0	0	0	0	0.1	10/6.3	NQR0129-002X	RSA6.1J4-W
NON DSC MODEL	*	*	*	*	*	*	*	*	*	*	*	*	*	*	*	*	*

■ BL-2.5/BL-3.5 SCHEMATIC DIAGRAM

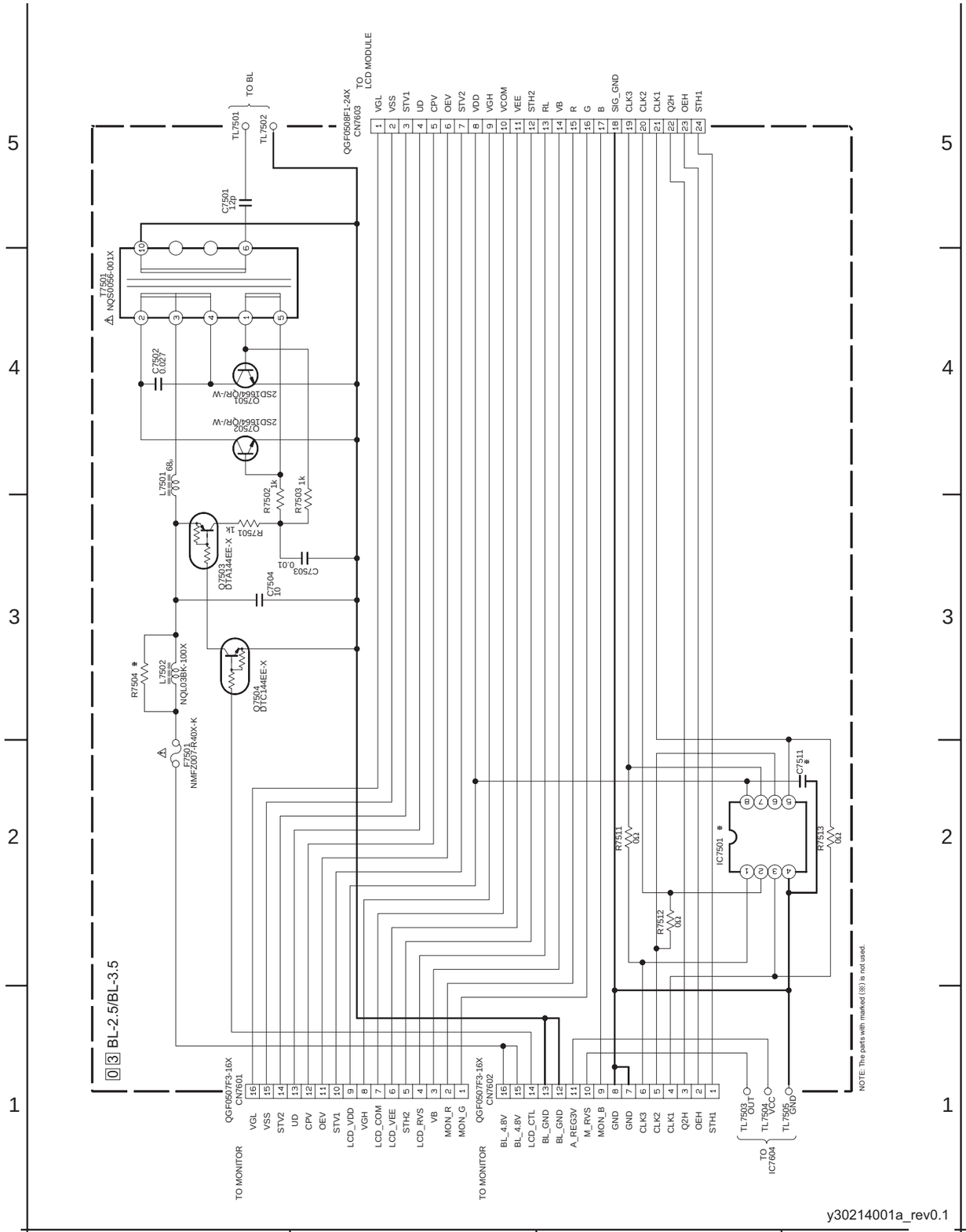

■ CCD SCHEMATIC DIAGRAM

NOTES : ● IC5001 is incorporated in the CCD base assembly.
When IC 5001 needs replacement, replace the CCD base assembly in whole because it cannot be replaced alone.

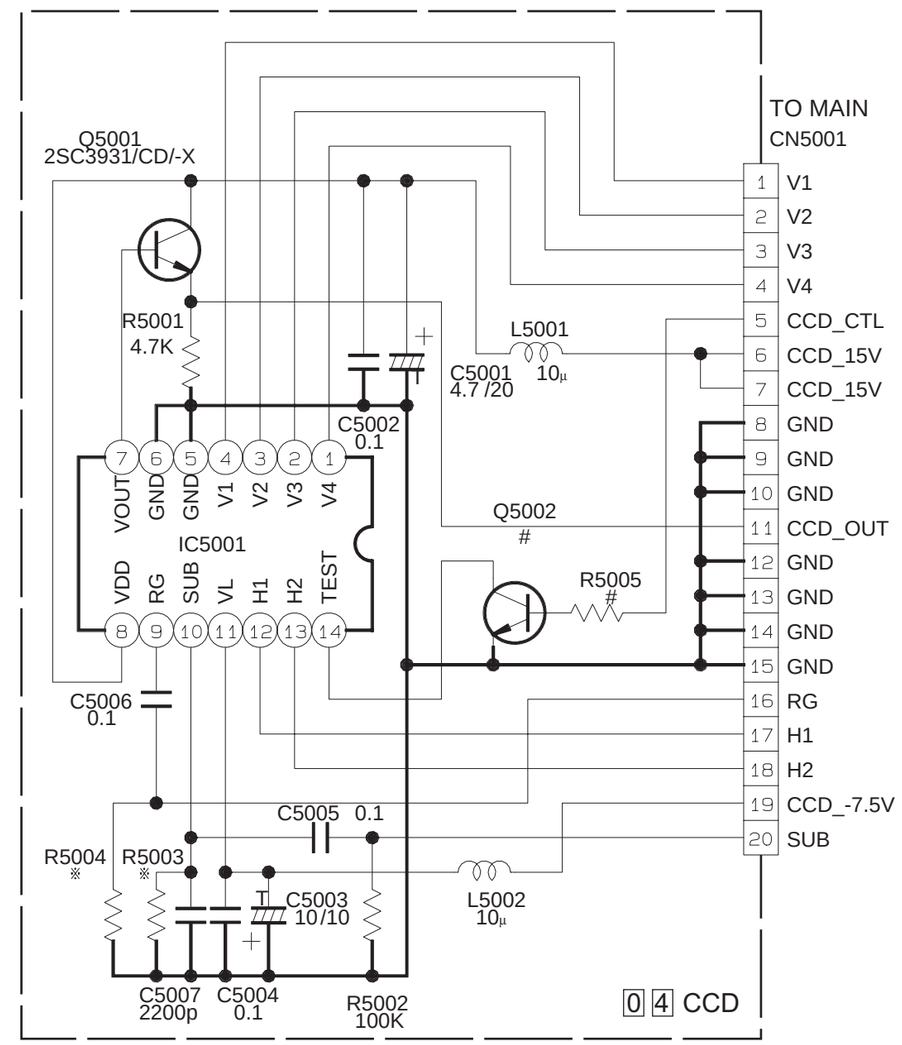

	Q5002	R5005
DSC MODEL	2SC4081/QR/-X	4.7K
NON DSC MODEL	※	※

NOTE: The parts with marked (※) is not used.

■ MDA SCHEMATIC DIAGRAM

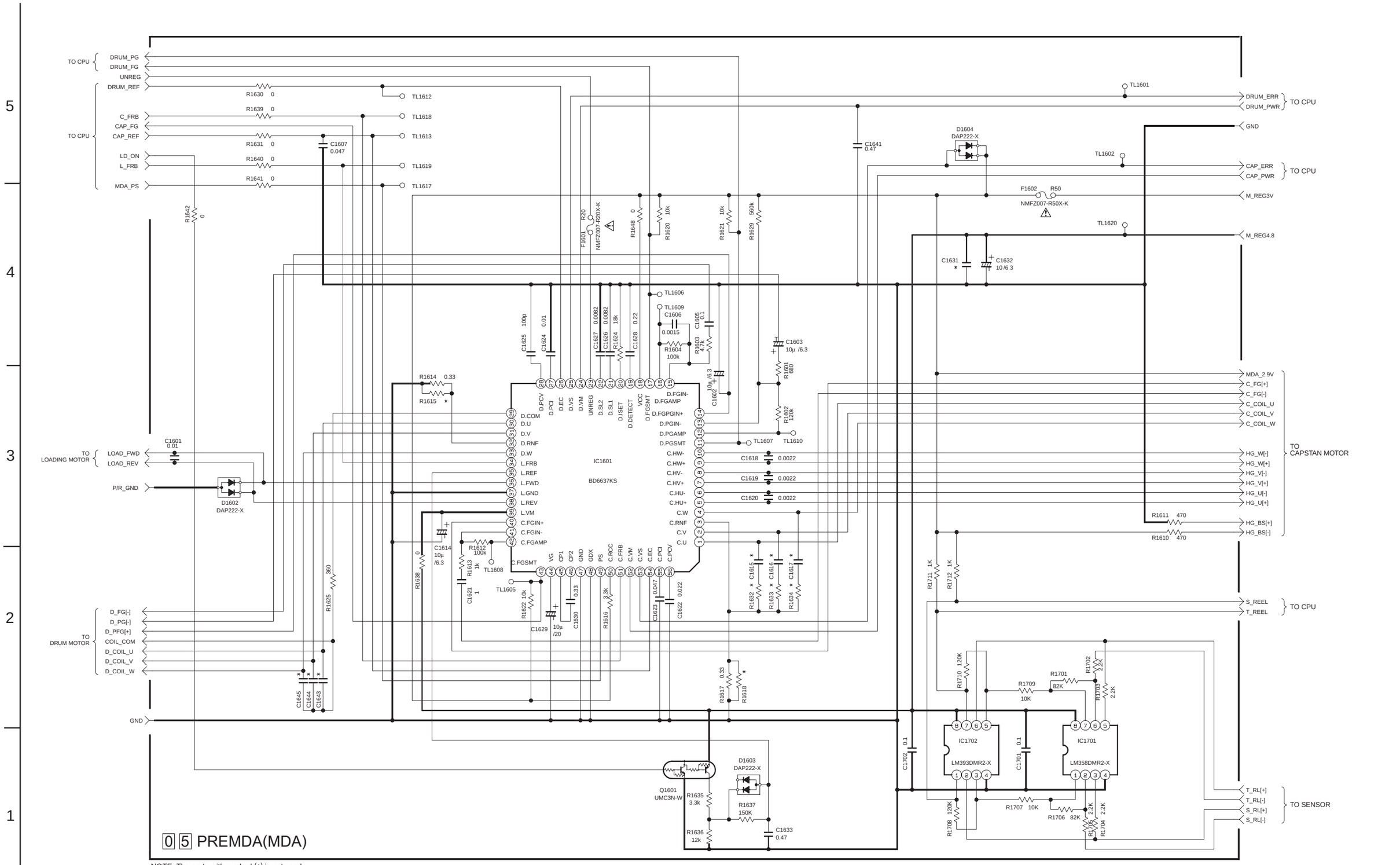

05 PREMDA(MDA)

NOTE: The parts with marked (*) is not used.

y20232001a_rev0.1

■ PRE/REC SCHEMATIC DIAGRAM

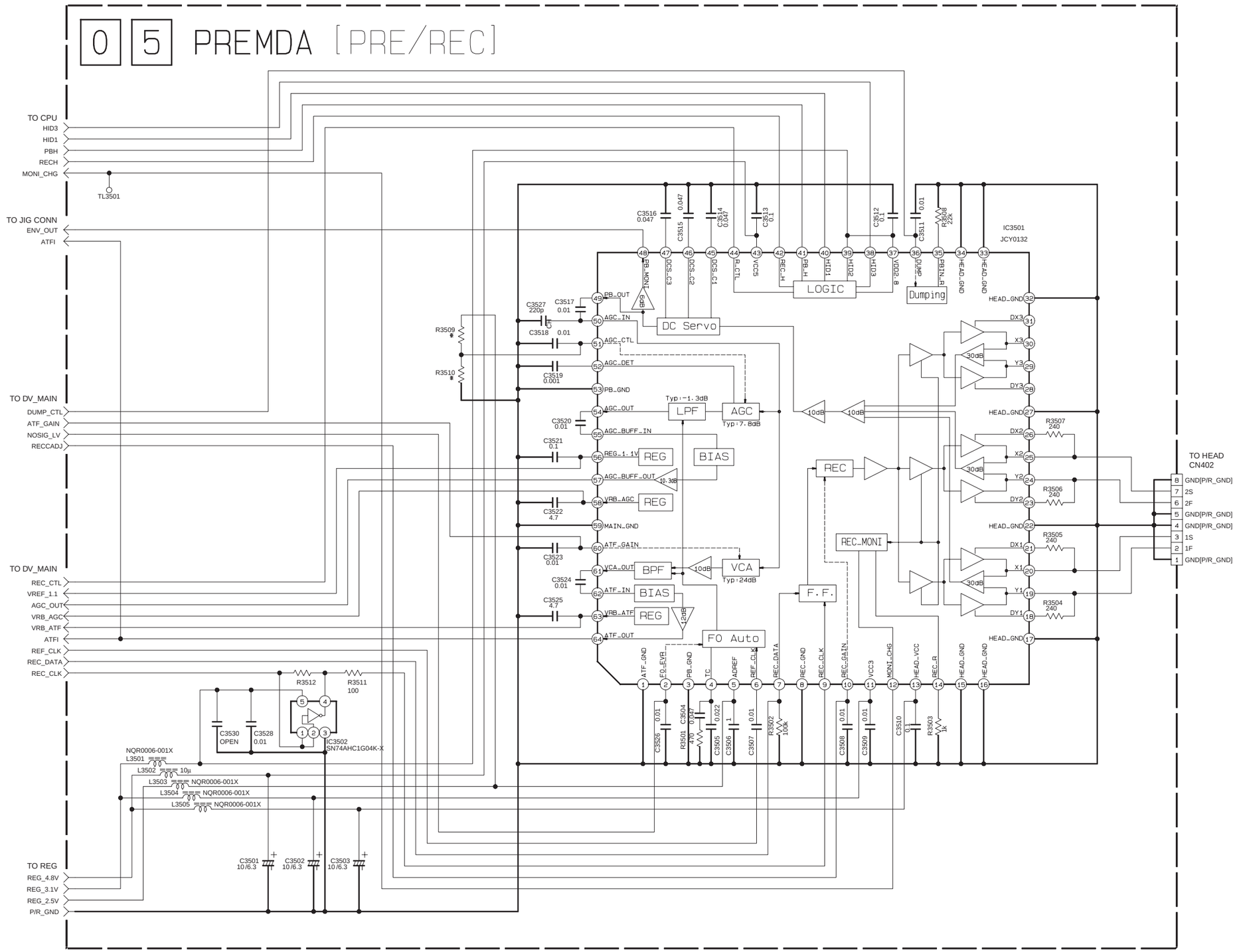

NOTE: The parts with marked (※) is not used.

y20234001a_rev0.1

■ PREMDA IF SCHEMATIC DIAGRAM

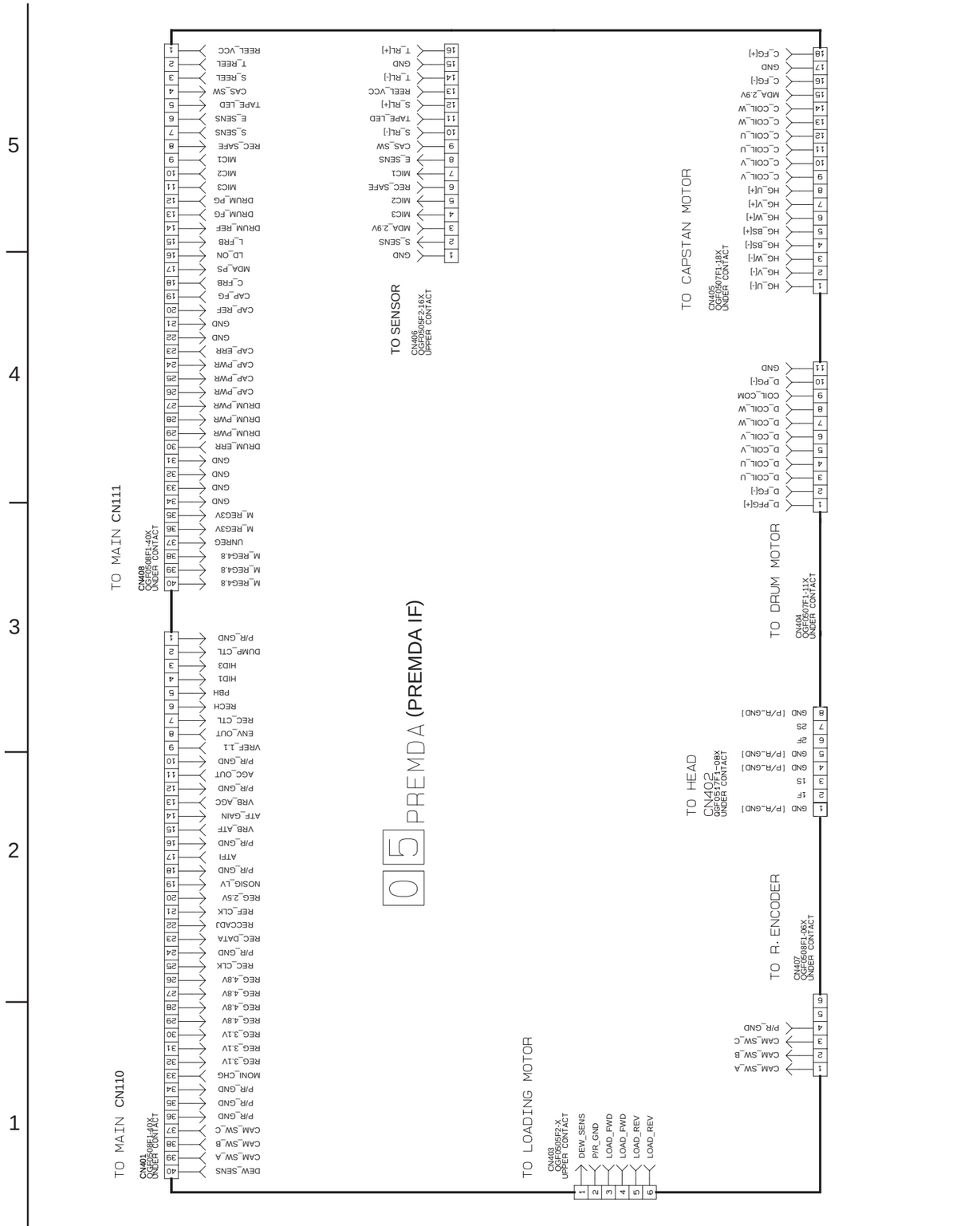

y30236001a_rev0.1

■ JACK SCHEMATIC DIAGRAM

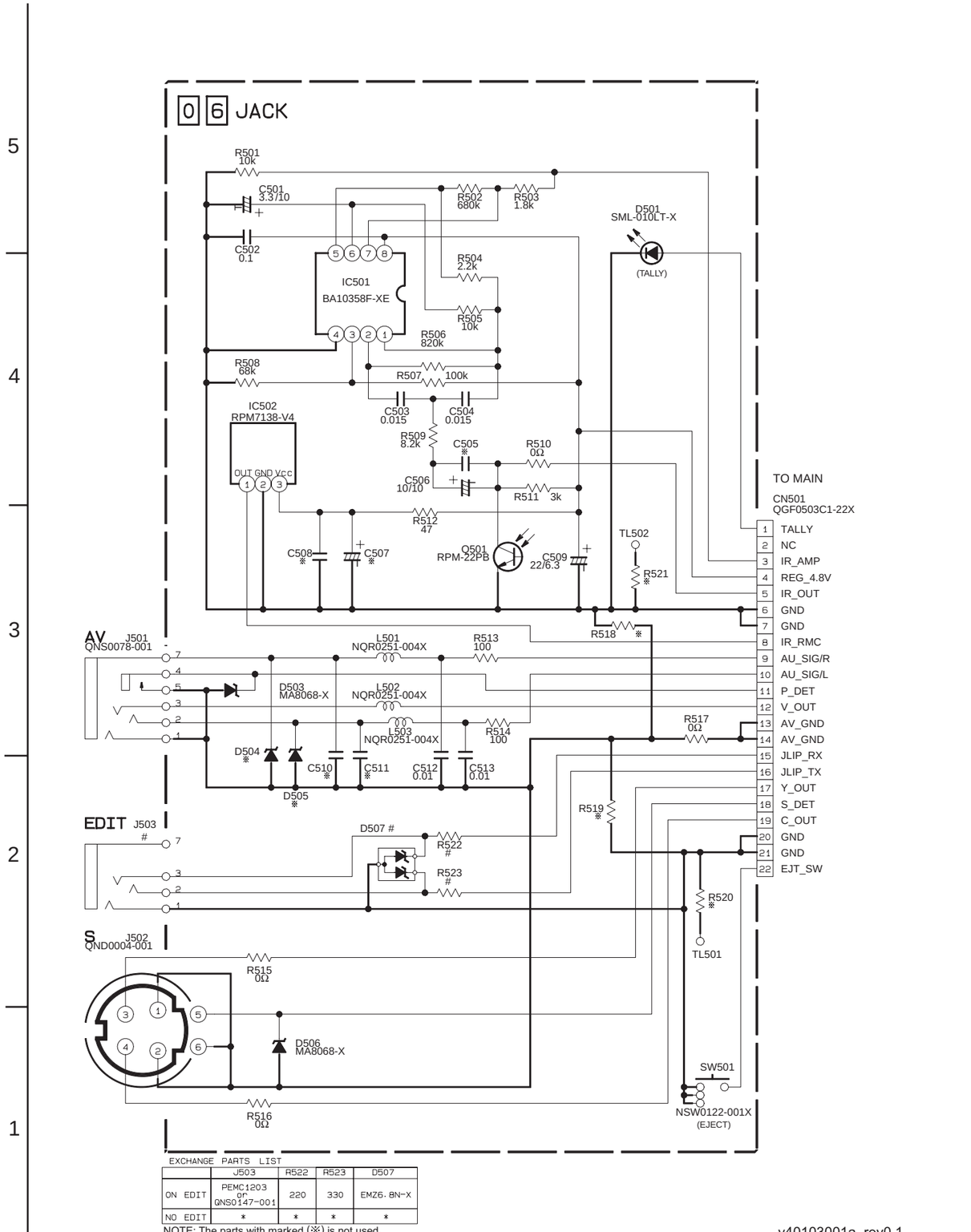

EXCHANGE PARTS LIST

	J503	R522	R523	D507
ON EDIT	PEMC1203 or QNS0147-001	220	330	EMZ6.8N-X
NO EDIT	*	*	*	*

NOTE: The parts with marked (※) is not used.

y40103001a_rev0.1

■ B/W-VF SCHEMATIC DIAGRAM

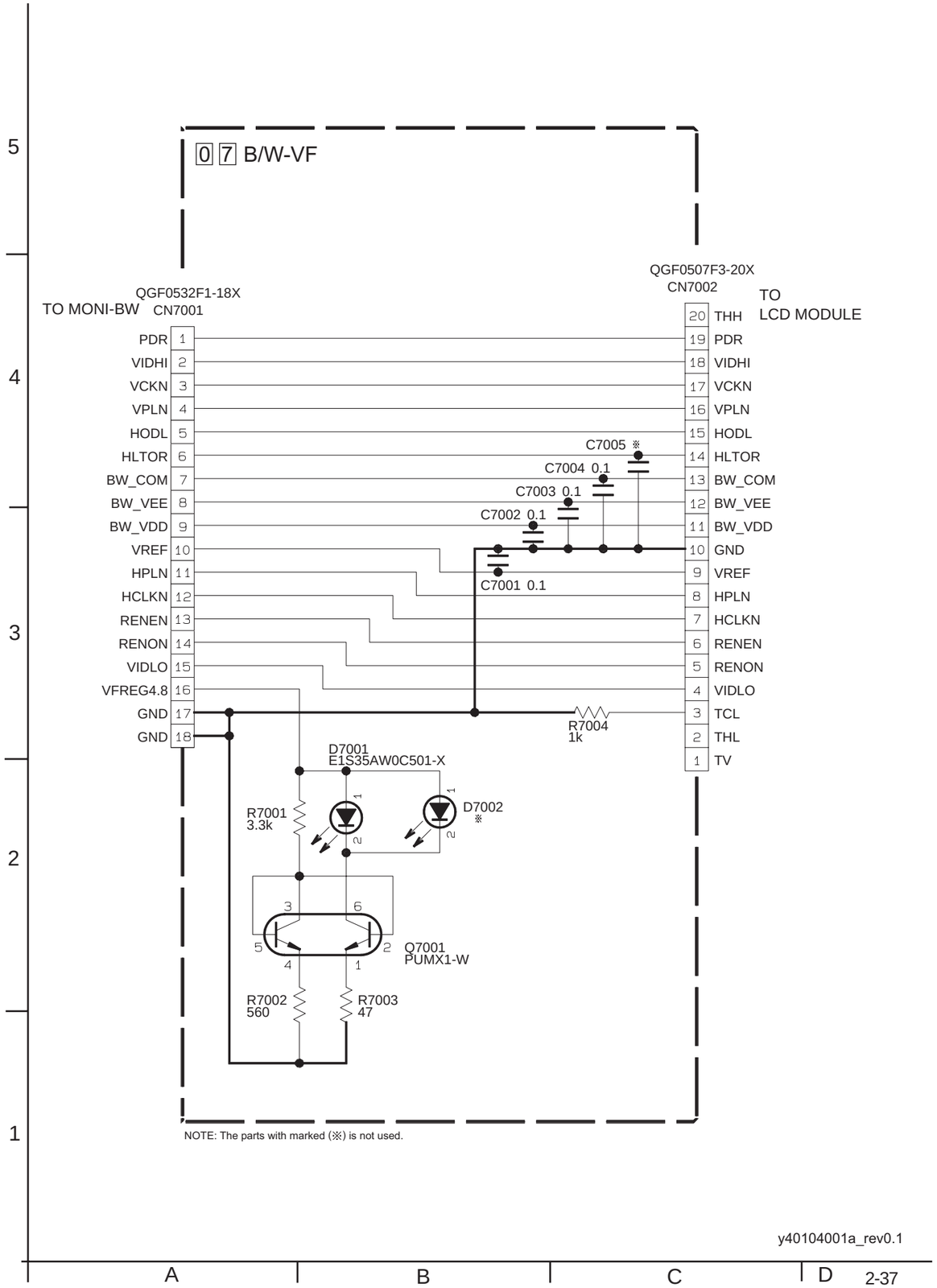

■ ZOOM UNIT SCHEMATIC DIAGRAM

NOTES : ● *The schematic diagram is only for reference. Avoid replacing individual parts. Replace the entire unit only.*

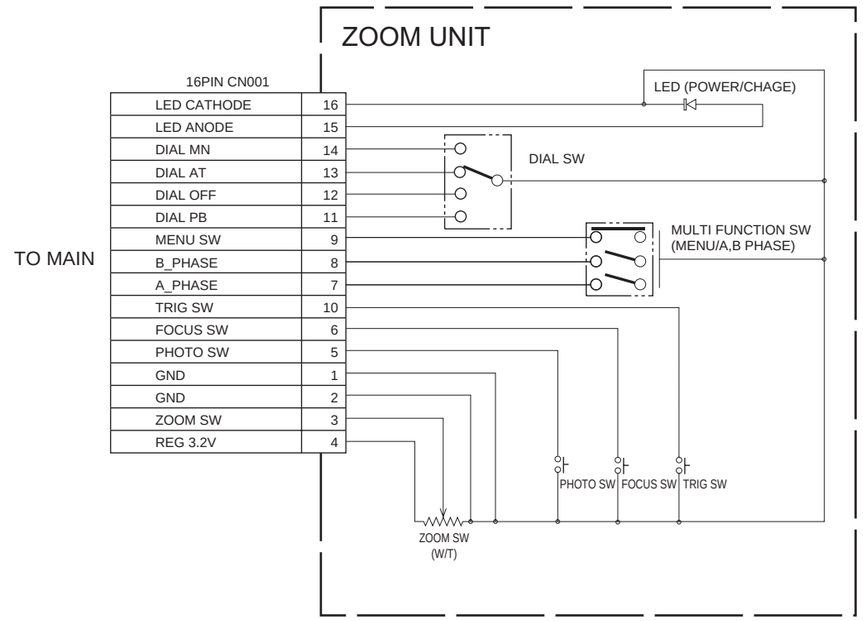

■ MAIN CIRCUIT BOARD

<01> MAIN
YB 10404-01-01

FOIL SIDE(B)

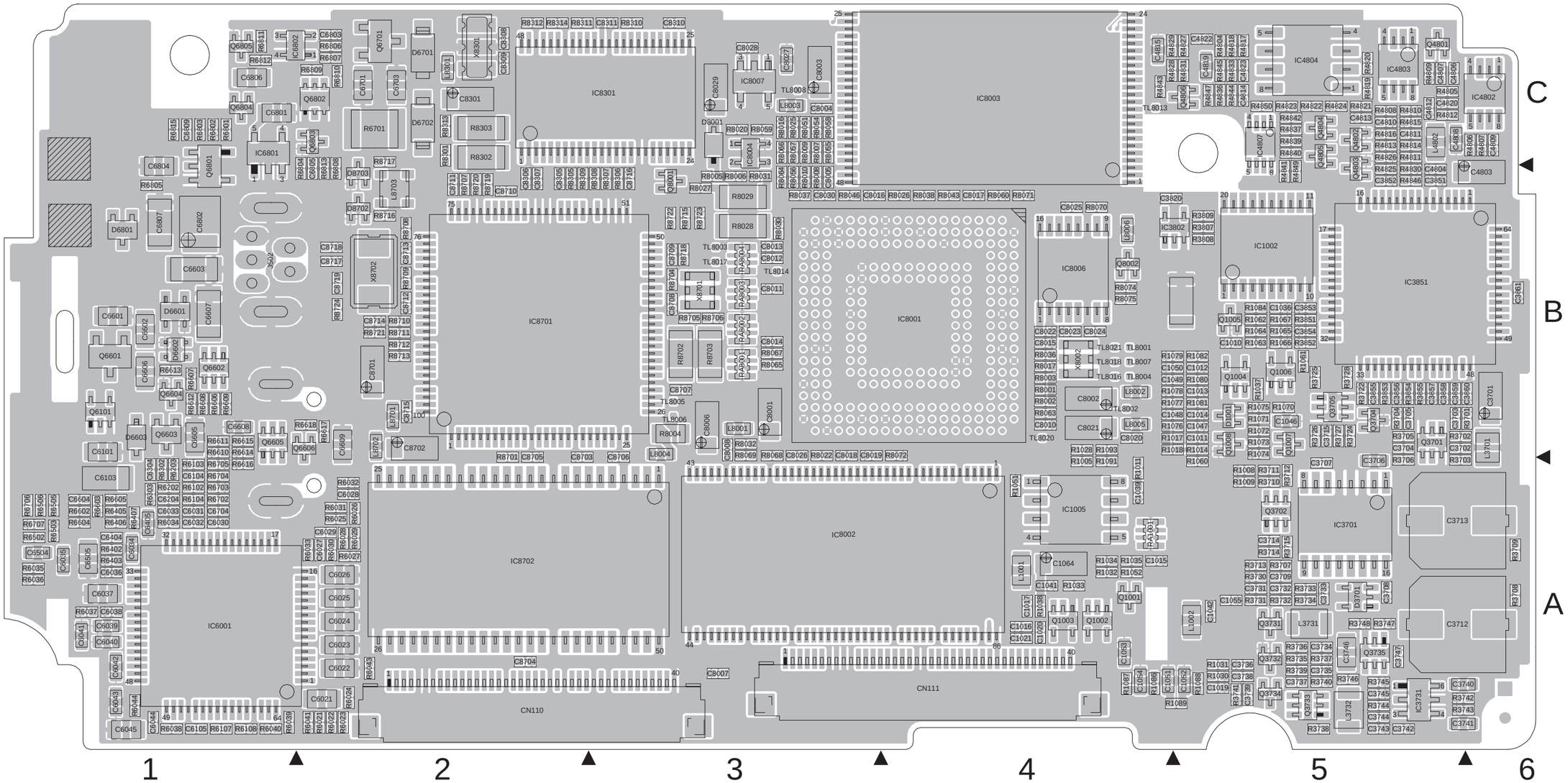

■ MAIN CIRCUIT BOARD

<01> MAIN
YB 10404-01-01

COMPONENT SIDE(A)

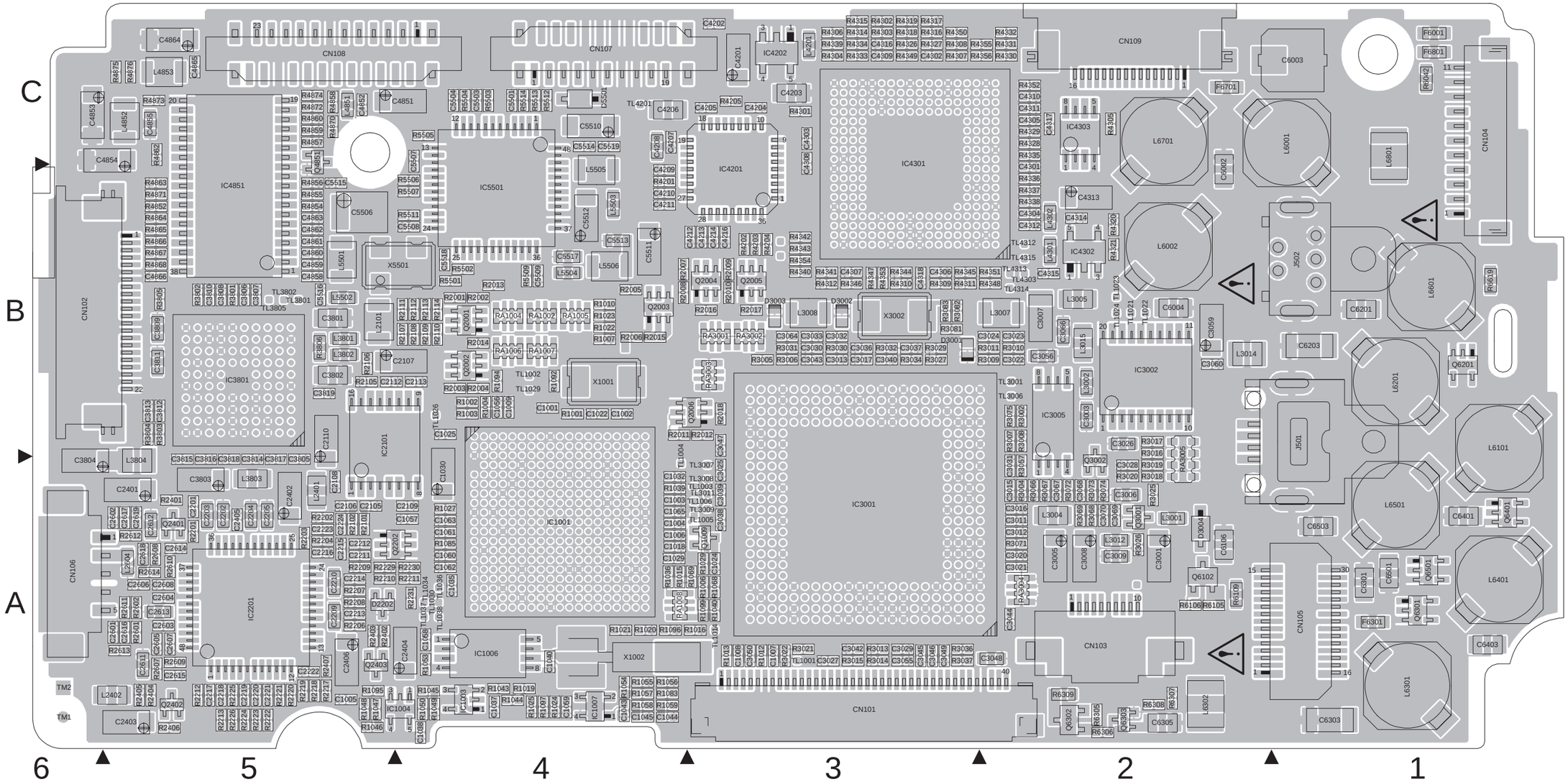

COMPONENT PARTS LOCATION GUIDE <MAIN> YB 10404-01-01

REF.NO.	LOCATION
CAPACITOR	
C1001	A C 4B
C1002	A C 4B
C1003	A C 4A
C1004	A C 4A
C1005	A C 5A
C1006	A C 4A
C1007	A C 3A
C1008	A C 3A
C1009	A C 4B
C1010	B C 5B
C1011	B C 5B
C1012	B C 5B
C1013	B C 5B
C1014	B C 5B
C1015	B C 4A
C1016	B C 4A
C1017	B C 4A
C1018	A C 4A
C1019	B C 5A
C1020	B C 4A
C1021	B C 4A
C1022	A C 4B
C1024	A C 3A
C1025	A C 4B
C1029	A C 4A
C1030	A C 4A
C1032	A C 4A
C1035	A C 4A
C1036	B C 5B
C1037	A C 4A
C1038	A C 4A
C1039	B C 4A
C1040	A C 4A
C1041	B C 4A
C1042	B C 5A
C1043	A C 4A
C1044	A C 4A
C1045	A C 4A
C1046	B C 5B
C1047	B C 5B
C1048	B C 5B
C1049	B C 5B
C1050	B C 5B
C1051	B C 4A
C1052	B C 5A
C1053	B C 4A
C1054	B C 4A
C1055	B C 5A
C1056	A C 4B
C1057	A C 4A
C1058	A C 4A
C1059	A C 4A
C1060	A C 4A
C1061	A C 4A
C1062	A C 4A
C1063	A C 4A
C1064	B C 4A
C1065	A C 4A
C2105	A C 5A
C2106	A C 5A
C2107	A C 4B
C2108	A C 5A
C2109	A C 4A
C2110	A C 5B
C2112	A C 5B
C2113	A C 4B
C2201	A C 5A
C2202	A C 5A
C2203	A C 5A
C2204	A C 5A
C2205	A C 5A
C2209	A C 5A
C2210	A C 5A
C2211	A C 5A
C2212	A C 5A
C2213	A C 5A
C2214	A C 5A
C2215	A C 5A
C2216	A C 5A
C2217	A C 5A
C2218	A C 5A
C2219	A C 5A
C2220	A C 5A
C2221	A C 5A
C2222	A C 5A
C2223	A C 5A
C2224	A C 5A
C2401	A C 5A
C2402	A C 5A
C2403	A C 5A
C2404	A C 4A
C2405	A C 5A
C2406	A C 5A
C2601	A C 5A
C2602	A C 5A
C2603	A C 5A
C2604	A C 5A
C2605	A C 5A
C2606	A C 5A
C2607	A C 5A
C2608	A C 5A
C2611	A C 5A
C2612	A C 5A
C2613	A C 5A
C2614	A C 5A
C2615	A C 5A
C2616	A C 5A
C2617	A C 5A
C2618	A C 5A
C2619	A C 5A
C3001	A C 2A
C3003	A C 2B
C3005	A C 2A
C3006	A C 2A
C3007	A C 2B
C3008	A C 2A
C3009	A C 2A

REF.NO.	LOCATION
C3011	A C 2A
C3012	A C 2A
C3013	A C 3B
C3015	A C 2A
C3016	A C 2A
C3017	A C 3B
C3020	A C 2A
C3021	A C 2A
C3022	A C 2B
C3023	A C 2B
C3024	A C 2B
C3025	A C 3A
C3026	A C 2B
C3027	A C 3A
C3028	A C 2A
C3029	A C 3A
C3030	A C 3B
C3031	A C 2A
C3032	A C 3B
C3033	A C 3B
C3036	A C 3B
C3037	A C 3B
C3038	A C 3A
C3039	A C 3A
C3040	A C 3B
C3042	A C 3A
C3043	A C 3B
C3044	A C 2A
C3045	A C 3A
C3046	A C 3A
C3047	A C 3B
C3048	A C 2A
C3049	A C 3A
C3050	A C 3A
C3055	A C 3A
C3056	A C 2B
C3059	A C 2B
C3060	A C 2B
C3064	A C 3B
C3066	A C 2B
C3067	A C 2A
C3068	A C 2A
C3069	A C 2A
C3070	A C 2A
C3701	B C 6B
C3702	B C 5B
C3703	B C 5B
C3704	B C 5B
C3705	B C 5B
C3706	B C 5A
C3707	B C 5A
C3708	B C 5A
C3709	B C 5A
C3712	B C 5A
C3713	B C 5A
C3714	B C 5A
C3715	B C 5B
C3731	B C 5A
C3732	B C 5A
C3733	B C 5A
C3734	B C 5A
C3735	B C 5A
C3736	B C 5A
C3737	B C 5A
C3738	B C 5A
C3739	B C 5A
C3740	B C 6A
C3741	B C 6A
C3742	B C 5A
C3743	B C 5A
C3744	B C 5A
C3745	B C 5A
C3746	B C 5A
C3747	B C 5A
C3801	A C 5B
C3802	A C 5B
C3803	A C 5A
C3804	A C 6A
C3805	A C 5A
C3806	A C 5B
C3807	A C 5B
C3808	A C 5B
C3809	A C 5B
C3810	A C 5B
C3811	A C 5B
C3812	A C 5B
C3813	A C 5B
C3814	A C 5A
C3815	A C 5A
C3816	A C 5A
C3817	A C 5A
C3818	A C 5A
C3819	A C 5B
C3820	B C 5B
C3851	B C 5B
C3852	B C 5B
C3853	B C 5B
C3854	B C 5B
C3855	B C 5B
C3856	B C 5B
C3857	B C 5B
C3858	B C 5B
C3859	B C 5B
C3860	B C 6B
C3861	B C 6B
C4201	A C 3C
C4202	A C 3C
C4203	A C 3C
C4204	A C 3C
C4205	A C 3C
C4206	A C 4C
C4207	A C 4C
C4208	A C 4C
C4209	A C 4B
C4210	A C 4B
C4211	A C 4B
C4212	A C 4B
C4213	A C 3B

REF.NO.	LOCATION
C4214	A C 3B
C4216	A C 3B
C4301	A C 2B
C4302	A C 3C
C4303	A C 3C
C4304	A C 2B
C4305	A C 2C
C4306	A C 3B
C4307	A C 3B
C4308	A C 3C
C4309	A C 3C
C4310	A C 2C
C4311	A C 2C
C4312	A C 2B
C4313	A C 2B
C4314	A C 2B
C4315	A C 2B
C4316	A C 3C
C4317	A C 2C
C4318	A C 3B
C4803	B C 6B
C4804	B C 5B
C4806	B C 5C
C4807	B C 5C
C4808	B C 5C
C4809	B C 6C
C4810	B C 5C
C4811	B C 5C
C4812	B C 5C
C4813	B C 5C
C4814	B C 5C
C4815	B C 4C
C4819	B C 5C
C4820	B C 5C
C4822	B C 5C
C4823	B C 5C
C4851	A C 4C
C4852	A C 5C
C4853	A C 6C
C4854	A C 5C
C4855	A C 5C
C4858	A C 5B
C4859	A C 5B
C4860	A C 5B
C4861	A C 5B
C4862	A C 5B
C4863	A C 5B
C4864	A C 5C
C4865	A C 5C
C4866	A C 5B
C5501	A C 4C
C5503	A C 4C
C5504	A C 4C
C5506	A C 5B
C5507	A C 4C
C5508	A C 4B
C5509	A C 4B
C5510	A C 4C
C5511	A C 4B
C5512	A C 4B
C5513	A C 4B
C5514	A C 4C
C5515	A C 5B
C5516	A C 5B
C5517	A C 4B
C5518	A C 4B
C5519	A C 4C
C6002	A C 2B
C6003	A C 1C
C6004	A C 2B
C6021	B C 2A
C6022	B C 2A
C6023	B C 2A
C6024	B C 2A
C6025	B C 2A
C6026	B C 2A
C6027	B C 2A
C6028	B C 2A
C6029	B C 2A
C6030	B C 1A
C6031	B C 1A
C6032	B C 1A
C6033	B C 1A
C6034	B C 1A
C6035	B C 1A
C6036	B C 1A
C6037	B C 1A
C6038	B C 1A
C6039	B C 1A
C6040	B C 1A
C6041	B C 1A
C6042	B C 1A
C6043	B C 1A
C6044	B C 1A
C6045	B C 1A
C6101	B C 1B
C6103	B C 1A
C6104	B C 1A
C6105	B C 1A
C6106	A C 2A
C6201	A C 1B
C6203	A C 1B
C6204	B C 1A
C6301	A C 1A
C6303	A C 1A
C6304	B C 1A
C6305	A C 2A
C6401	A C 1A
C6403	A C 1A
C6404	B C 1A
C6405	B C 1A
C6501	A C 1A
C6503	A C 1A
C6504	B C 1A
C6505	B C 1A
C6601	B C 1B
C6602	B C 1B
C6603	B C 1B

REF.NO.	LOCATION
C6604	B C 1A
C6605	B C 1B
C6606	B C 1B
C6607	B C 1B
C6608	B C 1B
C6609	B C 2B
C6701	B C 2C
C6703	B C 2C
C6704	B C 1A
C6801	B C 1C
C6802	B C 1B
C6803	B C 2C
C6804	B C 1B
C6805	B C 2B
C6806	B C 1C
C6807	B C 1B
C6809	B C 1C
C8001	B C 3B
C8002	B C 4B
C8003	B C 3C
C8004	B C 3C
C8005	B C 3B
C8006	B C 3B
C8007	B C 3A
C8008	B C 3B
C8010	B C 4B
C8011	B C 3B
C8012	B C 3B
C8013	B C 3B
C8014	B C 3B
C8015	B C 4B
C8016	B C 3B
C8017	B C 4B
C8018	B C 3B
C8019	B C 3B
C8020	B C 4B
C8021	B C 4B
C8022	B C 4B
C8023	B C 4B
C8024	B C 4B
C8025	B C 4B
C8026	B C 3B
C8027	B C 3C
C8028	B C 3C
C8029	B C 3C
C8030	B C 3B
C8301	B C 2C
C8305	B C 2B
C8306	B C 2B
C8307	B C 2B
C8308	B C 2C
C8309	B C 2C
C8310	B C 3C
C8311	B C 3C
C8701	B C 2B
C8702	B C 2B
C8703	B C 2B
C8704	B C 2A
C8705	B C 2B
C8706	B C 3B
C8707	B C 3B
C8708	B C 3B
C8709	B C 3B
C8710	B C 2B
C8711	B C 2B
C8712	B C 2B
C8713	B C 2B
C8714	B C 2B
C8715	B C 2B
C8716	B C 3B
C8717	B C 2B
C8718	B C 2B
C8719	B C 2B
CONNECTOR	
CN101	A C 3A
CN102	A C 5B
CN103	A C 2A
CN104	A C 1C
CN105	A C 2A
CN106	A C 6A
CN107	A C 4C
CN108	A C 5C
CN109	A C 2C
CN110	B C 2A
CN111	B C 4A
DIODE	
D1001	B C 5B
D2202	A C 5A
D3001	A C 3B
D3002	A C 3B
D3003	A C 3B
D3004	A C 2A
D3701	B C 5A
D5501	A C 4C
D6601	B C 1B
D6602	B C 1B
D6603	B C 1B
D6701	B C 2C
D6702	B C 2C
D6801	B C 1B
D8001	B C 3C
D8702	B C 2B
D8703	B C 2B
FUSE	
F6001	A C 1C
F6301	A C 1A
F6701	A C 2C
F6801	A C 1C
IC	
IC1001	A C 4A
IC1002	B C 5B
IC1003	A C 4A
IC1004	A C 4A
IC1005	B C 4A

REF.NO.	LOCATION
IC1006	A C 4A
IC1007	A C 4A
IC2101	A C 5B
IC2201	A C 5A
IC3001	A C 3A
IC3002	A C 2B
IC3005	A C 2B
IC3701	B C 5A
IC3731	B C 5A
IC3801	A C 5B
IC3802	B C 5B
IC3851	B C 5B
IC4201	A C 3B
IC4202	A C 3C
IC4301	A C 3C
IC4302	A C 2B
IC4303	A C 2C
IC4802	B C 6C
IC4803	B C 5C
IC4804	B C 5C
IC4807	B C 5C
IC4851	A C 5B
IC5501	A C 4B
IC6001	B C 1A
IC6801	B C 1C
IC6802	B C 2C
IC8001	B C 4B
IC8002	B C 3A
IC8003	B C 4C
IC8004	B C 3C
IC8006	B C 4B
IC8007	B C 3C
IC8301	B C 3C
IC8701	B C 2B
IC8702	B C 2A
COIL	
L1001	B C 4A
L1002	B C 5A
L2101	A C 5B
L2401	A C 5A
L2402	A C 5A
L2604	A C 5A
L3001	A C 2A
L3002	A C 2B
L3004	A C 2A
L3005	A C 2B
L3007	A C 2B
L3008	A C 3B
L3012	A C 2A
L3014	A C 2B
L3015	A C 2B
L3701	B C 6B
L3731	B C 5A
L3732	B C 5A
L3801	A C 5B
L3802	A C 5B
L3803	A C 5A
L3804	A C 5A
L4201	A C 3C
L4301	A C 2B
L4302	A C 2B
L4802	B C 5C
L4851	A C 5C
L4852	A C 5C
L4853	A C 5C
L5501	A C 5B
L5502	A C 5B
L5503	A C 4B
L5504	A C 4B
L5505	A C 4B
L5506	A C 4B
L6001	A C 1C
L6002	A C 2B
L6101	A C 1B
L6201	A C 1B
L6301	A C 1A
L6302	A C 2A
L6401	A C 1A
L6501	A C 1A
L6601	A C 1B
L6701	A C 2C
L6801	A C 1C
L8001	B C 3B
L8002	B C 4B
L8003	B C 3C
L8004	B C 3B
L8005	B C 4B
L8006	B C 4B
L8301	B C 2C
L8701	B C 2B
L8702	B C 2B
L8703	B C 2B
TRANSISTOR	
Q1001	B C 4A
Q1002	B C 4A
Q1003	B C 4A
Q1004	B C 5B
Q1005	B C 5B
Q1006	B C 5B
Q1007	B C 5B
Q1008	B C 5B
Q1009	A C 3A
Q2001	A C 4B
Q2002	A C 4B
Q2003	A C 4B
Q2004	A C 3B
Q2005	A C 3B
Q2006	A C 3B
Q2202	A C 5A
Q2401	A C 5A
Q2402	A C 5A
Q2403	A C 5A
Q3001	A C 2A
Q3002	A C 2A
Q3701	B C 5B
Q3702	B C 5A

REF.NO.	LOCATION
Q3704	B C 5B
Q3705	B C 5B
Q3731	B C 5A
Q3732	B C 5A
Q3733	B C 5A
Q3734	B C 5A
Q3735	B C 5A
Q4801	B C 5C
Q4802	B C 5C
Q4803	B C 5B
Q4804	B C 5C
Q4805	B C 5C
Q4806	B C 5C
Q4851	A C 5C
Q6101	B C 1B
Q6102	A C 2A
Q6201	A C 1B
Q6301	A C 1A
Q6302	A C 2A
Q6303	A C 2A
Q6401	A C 1A
Q6501	A C 1A
Q6601	B C 1B
Q6602	B C 1B
Q6603	B C 1B
Q6604	B C 1B
Q6605	B C 1B
Q6606	B C 2B
Q6701	B C 2C
Q6801	B C 1B
Q6802	B C 2C
Q6803	B C 2C
Q6804	B C 1C
Q6805	B C 1C
Q8001	B C 3B
Q8002	B C 4B
RESISTOR	
R1001	A C 4B
R1002	A C 4B
R1003	A C 4B
R1004	A C 4B
R1005	B C 4A
R1006	A C 3A
R1007	A C 4B
R1008	B C 5A
R1009	B C 5A
R1010	A C 4B
R1011	B C 4A
R1012	A C 3A
R1013	A C 3A
R1014	B C 5B
R1015	A C 4A
R1016	A C 3A
R1017	B C 5B
R1018	B C 5B
R1019	A C 4A
R1020	A C 4A
R1021	A C 4A
R1022	A C 4B
R1023	A C 4B
R1024	A C 4A
R1025	A C 4A
R1027	A C 4A
R1028	B C 4B
R1029	A C 3A
R1030	B C 5A
R1031	B C 5A
R1032	B C 4A
R1033	B C 4A
R1034	B C 4A
R1035	B C 4A
R1036	A C 4A
R1037	B C 5B
R1038	B C 4A
R1039	A C 4A
R1040	A C 3A
R1043	A C 4A
R1044	A C 4A
R1045	A C 4A
R1046	A C 5A
R1047	A C 5A
R1048	A C 5A
R1049	A C 4A
R1050	A C 4A
R1051	B C 4A
R1052	B C 4A
R1053	A C 4A
R1054	A C 4A
R1055	A C 4A
R1056	A C 4A
R1057	A C 4A
R1058	A C 4A
R1059	A C 4A
R1060	B C 5A
R1061	B C 5B
R1062	B C 5B
R1063	B C 5B
R1064	B C 5B
R1065	B C 5B
R1066	B C 5B
R1067	B C 5B
R1068	A C 3A
R1069	A C 3A
R1070	B C 5B
R1071	B C 5B
R1072	B C 5B
R1073	B C 5B
R1074	B C 5B
R1075	B C 5B
R1076	B C 5B
R1077	B C 5B
R1078	B C 5B
R1079	B C 5B
R1080	B C 5B
R1081	B C 5B
R1082	B C 5B
R1083	A C 4A

REF.NO.	LOCATION
R1084	B C 5B
R1085	A C 4A
R1086	B C 4A
R1087	B C 4A
R1088	B C 5A
R1089	B C 5A
R1091	B C 4A
R1092	A C 4B
R1093	B C 4B
R1094	A C 4B
R1095	A C 5A
R1096	A C 4A
R1097	A C 4A
R1099	A C 3A
R2001	A C 4B
R2002	A C 4B
R2003	A C 4B
R2004	A C 4B
R2005	A C 4B
R2006	A C 4B
R2007	A C 4B
R2008	A C 4B
R2009	A C 3B
R2010	A C 3B
R2011	A C 4B
R2012	A C 3B
R2013	A C 4B
R2014	A C 4B
R2015	A C 4B
R2016	A C 3B
R2017	A C 3B
R2018	A C 3B
R2101	A C 5A
R2102	A C 5A
R2105	A C 5B
R2106	A C 5B
R2107	A C 4B
R2108	A C 4B
R2109	A C 4B
R2110	A C 4B
R2111	A C 4B
R2112	A C 4B
R2113	A C 4B
R2114	A C 4B
R2201	A C 5A
R2202	A C 5A
R2203	A C 5A
R2204	A C 5A
R2206	A C 5A
R2207	A C 5A
R2208	A C 5A
R2209	A C 5A
R2210	A C 5A
R2211	A C 4A
R2212	A C 5A
R2213	A C 5A
R2217	A C 5A
R2218	A C 5A
R2219	A C 5A
R2220	A C 5A
R2221	A C 5A
R2222	A C 5A
R2223	A C 5A
R2224	A C 5A
R2225	A C 5A
R2226	A C 5A
R2229	A C 5A
R2230	A C 4A
R2231	A C 4A
R2401	A C 5A
R2402	A C 5A
R2403	A C 5A
R2404	A C 5A
R2405	A C 5A
R2406	A C 5A
R2407	A C 5A
R2601	A C 5A
R2602	A C 5A
R2607	A C 5A
R2608	A C 5A
R2609	A C 5A
R2610	A C 5A
R2611	A C 5A
R2612	A C 5A
R2613	A C 5A
R2614	A C 5A
R3002	A C 2B
R3004	A C 2A
R3005	A C 3B
R3006	A C 3B
R3007	A C 2B
R3008	A C 2B
R3009	A C 2B
R3010	A C 2B
R3011	A C 2B
R3013	A C 3A
R3014	A C 3A
R3015	A C 3A
R3016	A C 2B
R3017	A C 2B
R3018	A C 2A
R3019	A C 2A
R3020	A C 2A
R3021	A C 3A
R3022	A C 3A
R3025	A C 2A
R3026	A C 2A
R3027	A C 3B
R3029	A C 3B
R3030	A C 3B
R3031	A C 3B
R3032	A C 3B
R3034	A C 3B
R3036	A C 3A
R3037	A C 3A
R3057	A C 2A
R3066	A C 2A
R3067	A C 2A

REF.NO.	LOCATION
R3068	A C 2A
R3069	A C 2A
R3071	A C 2A
R3072	A C 2A
R3073	A C 2A
R3074	A C 2A
R3075	A C 2B
R3081	A C 3B
R3082	A C 3B
R3083	A C 3B
R3701	B C 6B
R3702	B C 5B
R3703	B C 5A
R3704	B C 5B
R3705	B C 5B
R3706	B C 5A
R3707	B C 5A
R3708	B C 6A
R3709	B C 6A
R3710	B C 5A
R3711	B C 5A
R3712	B C 5A
R3713	B C 5A
R3714	B C 5A
R3715	B C 5A
R3722	B C 5B
R3724	B C 5B
R3725	B C 5B
R3726	B C 5B
R3727	B C 5B
R3728	B C 5B
R3730	B C 5A
R3731	B C 5A
R3732	B C 5A
R3733	B C 5A
R3734	B C 5A
R3735	B C 5A
R3736	B C 5A
R3737	B C 5A
R3738	B C 5A
R3739	B C 5A
R3740	B C 5A
R3741	B C 5A
R3742	B C 6A
R3743	B C 6A
R3744	B C 5A
R3745	B C 5A
R3746	B C 5A
R3747	B C 5A
R3748	B C 5A
R3801	A C 5B
R3802	A C 5B
R3803	A C 5B
R3804	A C 5B
R3805	A C 5B
R3806	A C 5B
R3807	B C 5B
R3808	B C 5B
R3809	B C 5B
R3851	B C 5B
R3852	B C 5B
R3853	B C 5B
R3854	B C 5B
R3855	B C 5B
R4201	A C 4B
R4202	A C 3B
R4203	A C 3B
R4204	A C 3B
R4205	A C 3C
R4301	A C 3C
R4302	A C 3C
R4303	A C 3C
R4304	A C 3C
R4305	A C 2C
R4306	A C 3C
R4307	A C 3C
R4308	A C 3C
R4309	A C 3B
R4310	A C 3B
R4311	A C 3B
R4312	A C 3B
R4314	A C 3C
R4315	A C 3C
R4316	A C 3C
R4317	A C 3C
R4318	A C 3C
R4319	A C 3C
R4320	A C 2B
R4321	A C 2B
R4326	A C 3C
R4327	A C 3C
R4328	A C 2C
R4329	A C 2C
R4330	A C 2C
R4331	A C 2C
R4332	A C 2C
R4333	A C 3C
R4334	A C 3C
R4335	A C 2C
R4336	A C 2B
R4337	A C 2B
R4338	A C 2B
R4339	A C 3C
R4340	A C 3B
R4341	A C 3B
R4342	A C 3B
R4343	A C 3B
R4344	A C 3B
R4345	A C 3B
R4346	A C 3B
R4347	A C 3B
R4348	A C 2B
R4349	A C 3C
R4350	A C 3C
R4351	A C 2B
R4352	A C 2C
R4353	A C 3B
R4354	A C 3B

REF.NO.	LOCATION
R4355	A C 3C
R4356	A C 3C
R4804	B C 5C
R4805	B C 5C
R4806	B C 6C
R4807	B C 6C
R4808	B C 5C
R4809	B C 5C
R4810	B C 5C
R4811	B C 5C
R4812	B C 5C
R4813	B C 5C
R4814	B C 5C
R4815	B C 5C
R4816	B C 5C
R4817	B C 5C
R4818	B C 5C
R4819	B C 5C
R4820	B C 5C
R4821	B C 5C
R4822	B C 5C
R4823	B C 5C
R4824	B C 5C
R4825	B C 5B
R4826	B C 5C
R4827	B C 5C
R4828	B C 5C
R4829	B C 5C
R4830	B C 5B
R4831	B C 5C
R4833	B C 5C
R4836	B C 5C
R4837	B C 5C
R4839	B C 5C
R4840	B C 5C
R4841	B C 5B
R4842	B C 5C
R4843	B C 4C
R4844	B C 5C
R4845	B C 5C
R4846	B C 5B
R4847	B C 5C
R4849	B C 5B
R4850	B C 5C
R4852	A C 5B
R4854	A C 5B
R4855	A C 5B
R4856	A C 5B
R4857	A C 5C
R4858	A C 5C
R4859	A C 5C
R4860	A C 5C
R4862	A C 5C
R4863	A C 5B
R4864	A C 5B
R4865	A C 5B
R4866	A C 5B
R4867	A C 5B
R4868	A C 5B
R4870	A C 5C
R4871	A C 5B
R4872	A C 5C
R4873	A C 5C
R4874	A C 5C
R4875	A C 5C
R4876	A C 5C
R5501	A C 4B
R5502	A C 4B
R5503	A C 4C
R5504	A C 4C
R5505	A C 4C
R5506	A C 4B
R5507	A C 4B
R5509	A C 4B
R5511	A C 4B
R5512	A C 4C
R5513	A C 4C
R5514	A C 4C
R6021	B C 2A
R6022	B C 2A
R6023	B C 2A
R6024	B C 2A
R6025	B C 2A
R6026	B C 2A
R6027	B C 2A
R6028	B C 2A
R6029	B C 2A
R6030	B C 2A
R6031	B C 2A
R6032	B C 2A
R6033	B C 2A
R6034	B C 1A
R6035	B C 1A
R6036	B C 1A
R6037	B C 1A
R6038	B C 1A
R6039	B C 1A
R6040	B C 1A
R6041	B C 2A
R6042	A C 1C
R6043	B C 2A
R6044	B C 1A
R6102	B C 1A
R6103	B C 1A
R6104	B C 1A
R6105	A C 2A
R6106	A C 2A
R6107	B C 1A
R6108	B C 1A
R6109	A C 2A
R6202	B C 1A
R6203	B C 1A
R6302	B C 1A
R6303	B C 1A
R6305	A C 2A
R6306	A C 2A
R6307	A C 2A
R6308	A C 2A

REF.NO.	LOCATION
R6309	A C 2A
R6402	B C 1A
R6403	B C 1A
R6405	B C 1A
R6406	B C 1A
R6407	B C 1A
R6502	B C 1A
R6503	B C 1A
R6505	B C 1A
R6506	B C 1A
R6602	B C 1A
R6603	B C 1A
R6604	B C 1A
R6605	B C 1A
R6606	B C 1B
R6607	B C 1B
R6608	B C 1B
R6609	B C 1B
R6610	B C 1B
R6611	B C 1B
R6612	B C 1B
R6613	B C 1B
R6614	B C 1B
R6615	B C 1B
R6616	B C 1A
R6617	B C 2B
R6618	B C 2B
R6619	A C 1B
R6701	B C 2C
R6702	B C 1A
R6703	B C 1A
R6704	B C 1A
R6705	B C 1A
R6706	B C 1A
R6707	B C 1A
R6801	B C 1C
R6802	B C 1C
R6803	B C 1C
R6804	B C 2B
R6805	B C 1B
R6806	B C 2C
R6807	B C 2C
R6808	B C 2B
R6809	B C 2C
R6810	B C 2C
R6811	B C 1C
R6812	B C 1C
R6813	B C 2B
R6815	B C 1C
R8001	B C 4B
R8002	B C 4B
R8003	B C 4B
R8004	B C 3B
R8005	B C 3B
R8006	B C 3B
R8007	B C 3C
R8008	B C 3B
R8009	B C 3C
R8010	B C 3B
R8016	B C 3C
R8017	B C 4B
R8020	B C 3C
R8022	B C 3B
R8025	B C 3C
R8026	B C 4B
R8027	B C 3B
R8028	B C 3B
R8029	B C 3B
R8030	B C 3B
R8031	B C 3B
R8032	B C 3B
R8036	B C 4B
R8037	B C 3B
R8038	B C 4B
R8043	B C 4B
R8046	B C 3B
R8051	B C 3C
R8054	B C 3C
R8055	B C 3C
R8056	B C 3B
R8057	B C 3C
R8058	B C 3C
R8059	B C 3C
R8060	B C 4B
R8063	B C 4B
R8064	B C 3B
R8065	B C 3B
R8066	B C 3C
R8067	B C 3B
R8068	B C 3B
R8069	B C 3B
R8070	B C 4B
R8071	B C 4B
R8072	B C 4B
R8074	B C 4B
R8075	B C 4B
R8301	B C 2C
R8302	B C 2C
R8303	B C 2C
R8305	B C 2B
R8306	B C 3B
R8307	B C 3B
R8308	B C 3B
R8309	B C 2B
R8310	B C 3C
R8311	B C 2C
R8312	B C 2C
R8313	B C 2C
R8314	B C 2C
R8701	B C 2B
R8702	B C 3B
R8703	B C 3B
R8704	B C 3B
R8705	B C 3B
R8706	B C 3B
R8707	B C 2B
R8708	B C 2B
R8709	B C 2B

REF.NO.	LOCATION
R8710	B C 2B
R8711	B C 2B
R8712	B C 2B
R8713	B C 2B
R8715	B C 3B
R8716	B C 2B
R8717	B C 2C
R8718	B C 3B
R8719	B C 2B
R8720	B C 2B
R8721	B C 2B
R8722	B C 3B
R8723	B C 3B
R8724	B C 2B
RA1001	B C 4A
RA1002	A C 4B
RA1004	A C 4B
RA1005	A C 4B
RA1006	A C 4B
RA1007	A C 4B
RA1008	A C 4A
RA3001	A C 3B
RA3002	A C 3B
RA3003	A C 3B
RA3004	A C 2A
RA3005	A C 2A
RA8001	B C 3B
RA8002	B C 3B
RA8003	B C 3B
RA8004	B C 3B
OTHER	
J501	A C 1B
J502	A D 1B
TL1001	A C 3A
TL1002	A C 4B
TL1003	A C 3A
TL1004	A C 4A
TL1005	A C 3A
TL1006	A C 3A
TL1014	A C 3A
TL1021	A C 2B
TL1022	A C 2B
TL1023	A C 2B
TL1024	A C 2B
TL1025	A C 2A
TL1026	A C 4B
TL1029	A C 4B
TL1030	A C 4A
TL1034	A C 4A
TL1036	A C 4A
TL1037	A C 4A
TL1038	A C 4A
TL3001	A C 2B
TL3006	A C 2B
TL3007	A C 3A
TL3008	A C 3A
TL3009	A C 3A
TL3011	A C 3A
TL3801	A C 5B
TL3802	A C 5B
TL3805	A C 5B
TL4201	A C 4C
TL4301	A C 3B
TL4302	A C 3B
TL4303	A C 2B
TL4312	A C 2B
TL4313	A C 2B
TL4314	A C 2B
TL4315	A C 2B
TL8001	B C 4B
TL8002	B C 4B
TL8003	B C 3B
TL8004	B C 4B
TL8005	B C 3B
TL8006	B C 3B
TL8007	B C 4B
TL8008	B C 3C
TL8013	B C 4C
TL8014	B C 3B
TL8016	B C 4B
TL8017	B C 3B
TL8018	B C 4B
TL8020	B C 4B
TL8021	B C 4B
TM1	A C 6A
TM2	A C 6A
TM5	A C 1A
TP110	B C 5B
X1001	A C 4B
X1002	A C 4A
X3002	A C 3B
X5501	A C 4B
X8002	B C 4B
X8301	B C 2C
X8701	B C 3B
X8702	B C 2B

COMPONENT PARTS LOCATION GUIDE <PREMDA> YB 10405-01-01

REF.NO.	LOCATION
CAPACITOR	
C1601	A C 1B
C1602	A C 3B
C1603	A C 3B
C1605	A C 3B
C1606	A C 3B
C1607	A C 4B
C1614	A C 3C
C1615	A C 3B
C1616	A C 3B
C1617	A C 3B
C1618	A C 3B
C1619	A C 3B
C1620	A C 3B
C1621	A C 3C
C1622	A C 4B
C1623	A C 4B
C1624	A C 3B
C1625	A C 3B
C1626	A C 3B
C1627	A C 3B
C1628	A C 3B
C1629	A C 4B
C1630	A C 3B
C1631	A C 3A
C1632	A C 3A
C1633	A C 4B
C1641	A C 3A
C1643	A C 3C
C1644	A C 3C
C1645	A C 3C
C1701	A C 3A
C1702	A C 4A
C3501	A C 2B
C3502	A C 2B
C3503	A C 2B
C3504	A C 2B
C3505	A C 2B
C3506	A C 2B
C3507	A C 2B
C3508	A C 2C
C3509	A C 2B
C3510	A C 2B
C3511	A C 2C
C3512	A C 2B
C3513	A C 2B
C3514	A C 2B
C3515	A C 2B
C3516	A C 2B
C3517	A C 2B
C3518	A C 2B
C3519	A C 2B
C3520	A C 2B
C3521	A C 2B
C3522	A C 2B
C3523	A C 2B
C3524	A C 2B
C3525	A C 2B
C3526	A C 2B
C3527	A C 2B
C3528	A C 1B
C3530	A C 1B
CONNECTOR	
CN401	A C 2A
CN402	A C 2C
CN403	A C 1B
CN404	A C 3C
CN405	A C 3C
CN406	A C 3B
CN407	A C 1B
CN408	A C 3A
DIODE	
D1602	A C 1B
D1603	A C 4B
D1604	A C 3A
FUSE	
F1601	A C 3A
F1602	A C 3A
IC	
IC1601	A C 3B
IC1701	A C 3A
IC1702	A C 4A
IC3501	A C 2B
IC3502	A C 1B
COIL	
L3501	A C 2A
L3502	A C 2A
L3503	A C 2A
L3504	A C 2A
L3505	A C 2A
TRANSISTOR	
Q1601	A C 4B
RESISTOR	
R1601	A C 3B
R1602	A C 3B
R1603	A C 3B
R1604	A C 3B
R1610	A C 3C
R1611	A C 4C
R1612	A C 3B
R1613	A C 3B
R1614	A C 3C
R1615	A C 3C
R1616	A C 3B
R1617	A C 3B
R1618	A C 3B
R1620	A C 3B
R1621	A C 3B
R1622	A C 3B
R1624	A C 3B
R1625	A C 3C

REF.NO.	LOCATION
R1629	A C 3B
R1630	A C 4B
R1631	A C 4B
R1632	A C 3B
R1633	A C 3B
R1634	A C 3B
R1635	A C 4B
R1636	A C 4B
R1637	A C 4B
R1638	A C 3C
R1639	A C 4B
R1640	A C 4B
R1641	A C 4B
R1642	A C 4B
R1648	A C 3B
R1701	A C 3A
R1702	A C 3A
R1703	A C 4A
R1704	A C 3A
R1705	A C 3A
R1706	A C 3A
R1707	A C 4A
R1708	A C 4A
R1709	A C 4A
R1710	A C 4A
R1711	A C 4A
R1712	A C 4A
R3501	A C 2B
R3502	A C 2B
R3503	A C 2C
R3504	A C 2C
R3505	A C 2C
R3506	A C 2C
R3507	A C 2C
R3508	A C 2C
R3509	A C 2B
R3510	A C 2B
R3511	A C 1B
R3512	A C 1B
OTHER	
TL1601	A C 3A
TL1602	A C 3A
TL1605	A C 3B
TL1606	A C 3A
TL1607	A C 3B
TL1608	A C 3C
TL1609	A C 3B
TL1610	A C 3B
TL1612	A C 4B
TL1613	A C 3B
TL1617	A C 4B
TL1618	A C 4B
TL1619	A C 4B
TL1620	A C 3A
TL3501	A C 2A
TM2	A C 4C
TM4	A C 4C
ZP1-1	A C 2B
ZP3-3	A C 1B
ZP3-5	A C 1B
ZP4-1	A C 3C
ZP4-2	A C 3A
ZP4-3	A C 3C
ZP4-5	A C 3C
ZP4-7	A C 3C
ZP4-9	A C 3C
ZP5-1	A C 3C
ZP5-2	A C 3C
ZP5-3	A C 3C
ZP5-4	A C 3C
ZP5-5	A C 4C
ZP5-6	A C 3C
ZP5-7	A C 3C
ZP5-8	A C 3C
ZP5-9	A C 4C
ZP6-1	A C 4B
ZP6-3	A C 3A
ZP7-4	A C 1B
ZP4-10	A C 3C
ZP4-11	A C 3C
ZP5-11	A C 4C
ZP5-13	A C 4C
ZP5-16	A C 3C
ZP5-17	A C 4C
ZP5-18	A C 4C
ZP6-10	A C 3B
ZP6-12	A C 3B
ZP6-14	A C 4B
ZP6-16	A C 4B
ZP8-21	A C 3A

■ PREMDA CIRCUIT BOARD

<05> PREMDA
YB 10405-01-01

FOIL SIDE(B)

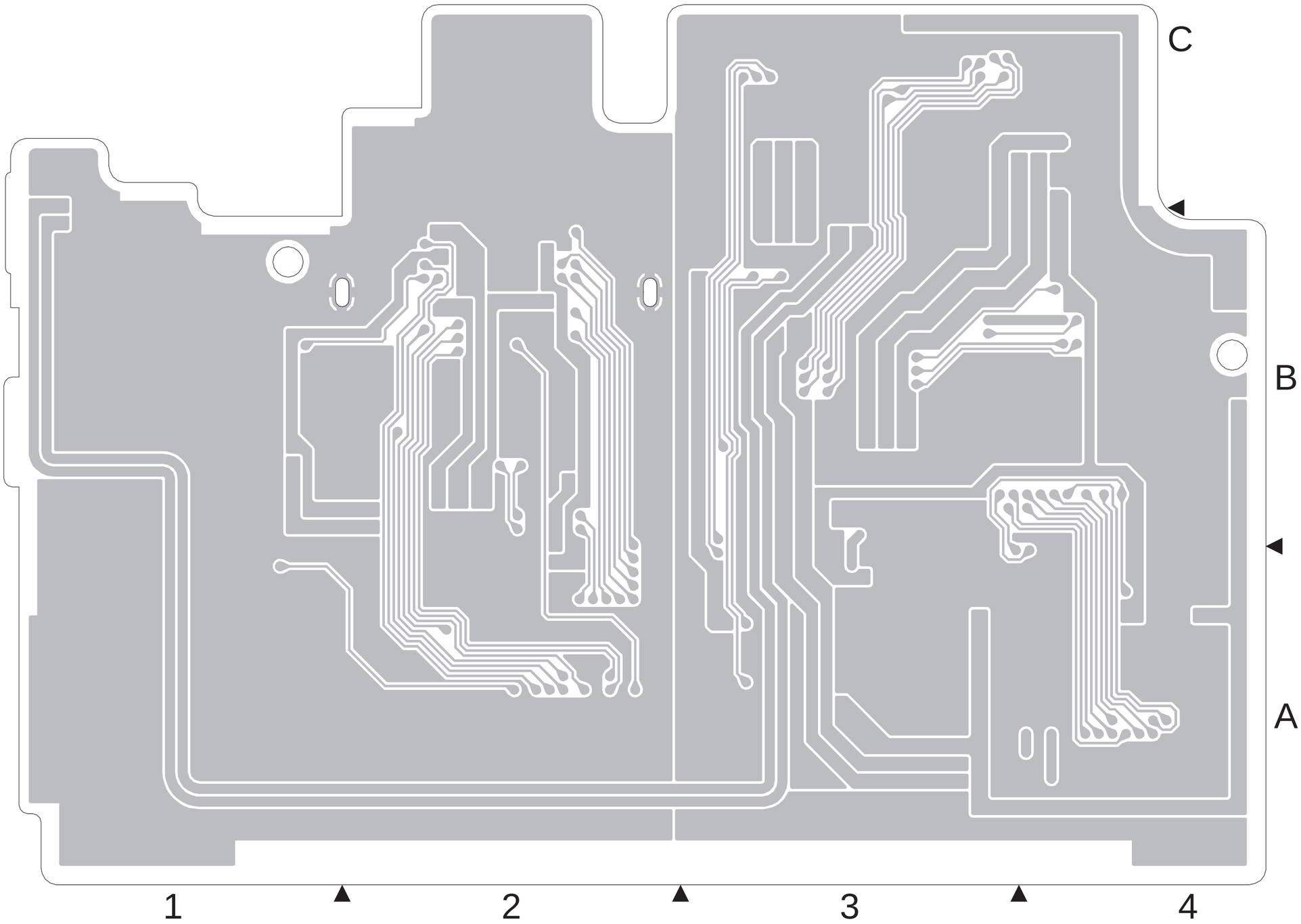

■ PREMDA CIRCUIT BOARD

<05> PREMDA
YB 10405-01-01

COMPONENT SIDE(A)

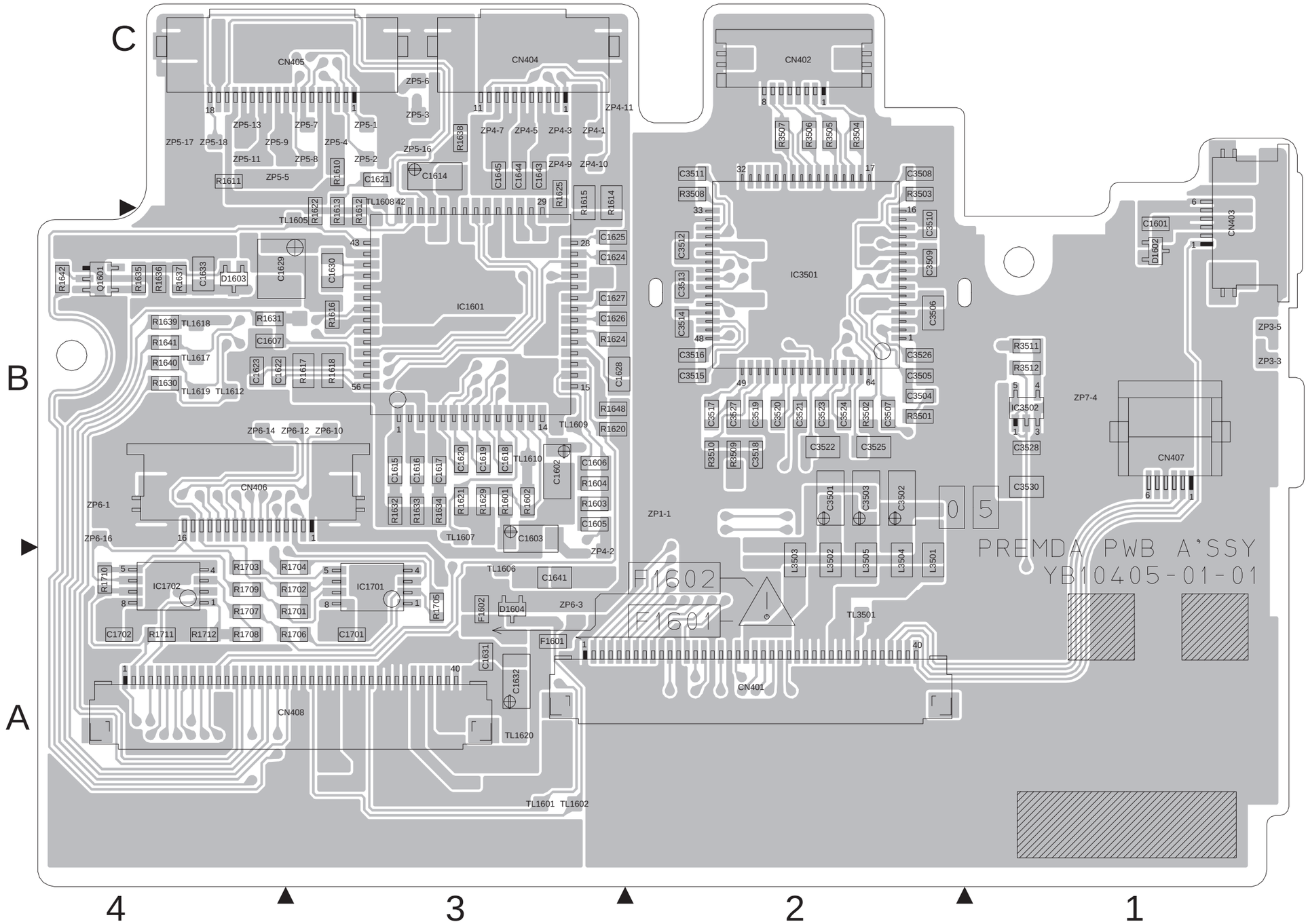

■ MONI-BW CIRCUIT BOARD

COMPONENT SIDE(A)

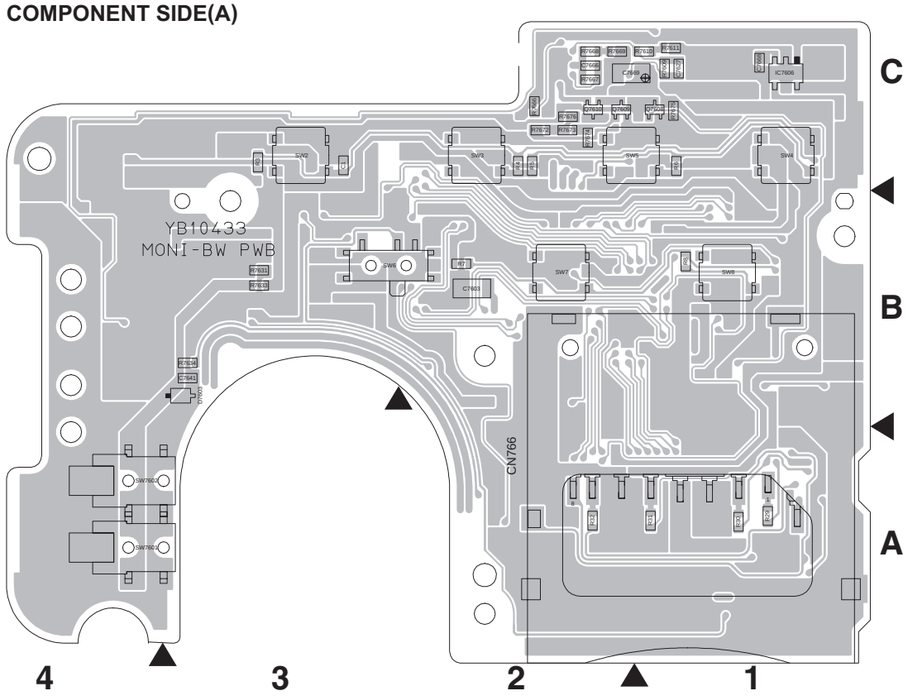

<02> MONI-BW
YB 10433

FOIL SIDE(B)

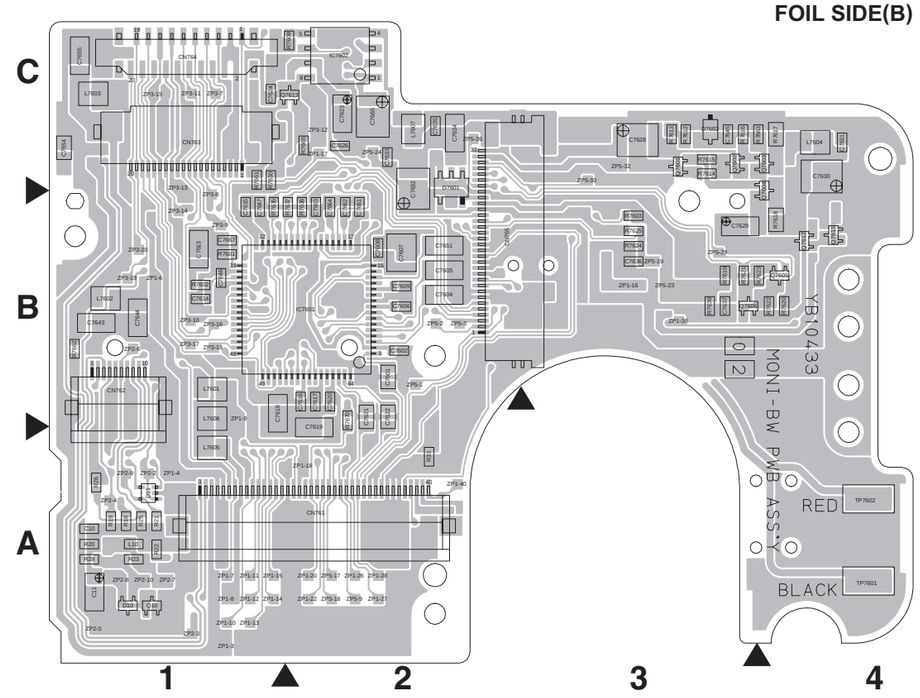

<02> MONI-BW
YB 10433

COMPONENT PARTS LOCATION GUIDE <MONI-BW> YB10433

REF.NO.	LOCATION	REF.NO.	LOCATION	REF.NO.	LOCATION	REF.NO.	LOCATION	REF.NO.	LOCATION	REF.NO.	LOCATION	REF.NO.	LOCATION	REF.NO.	LOCATION	REF.NO.	LOCATION	REF.NO.	LOCATION
CAPACITOR		C7627	A C 1C	C7667	B C 1B	L7601	B C 1B	R5	A C 2C	R7613	B C 3C	R7667	A C 2C	ZP1-3	B C 1A	ZP1-15	B C 1A	ZP5-23	B C 3B
C1	A C 3C	C7628	B C 3C	C7668	A C 1C	L7602	B C 1B	R6	A C 1C	R7614	B C 3C	R7668	A C 2C	ZP1-4	B C 1A	ZP1-16	B C 3B	ZP5-24	B C 2C
C10	B C 1A	C7629	B C 3B	C7669	A C 2C	L7603	B C 1C	R7	A C 2B	R7615	B C 3C	R7669	A C 2C	ZP1-6	B C 1B	ZP1-17	B C 2C	ZP5-26	B C 2C
C11	B C 1A	C7630	B C 4C			L7604	B C 4C	R8	A C 1B	R7616	B C 3C	R7670	B C 2B	ZP1-7	B C 1A	ZP1-18	B C 2A	ZP5-29	B C 3B
C7601	B C 2B	C7631	B C 4C	**CONNECTOR**		L7605	B C 1A	R18	B C 1A	R7617	B C 4C	R7672	A C 2C	ZP1-8	B C 1A	ZP1-20	B C 2A	ZP5-30	B C 3C
C7602	B C 2B	C7632	B C 2C	CN761	B C 1A	L7606	B C 1B	R19	B C 1A	R7618	B C 4B	R7673	A C 2C	ZP1-9	B C 1B	ZP1-22	B C 2A	ZP5-32	B C 3C
C7603	A C 2B	C7633	B C 2C	CN762	B C 1B	L7607	B C 2C	R20	B C 1A	R7619	B C 3B	R7674	A C 2C	ZP2-2	B C 1A	ZP1-26	B C 2A		
C7604	B C 2B	C7634	B C 2C	CN763	B C 1C			R21	B C 1A	R7620	B C 4B	R7675	A C 1C	ZP2-3	B C 1A	ZP1-27	B C 2A		
C7605	B C 2B	C7635	B C 2C	CN764	B C 1C	**TRANSISTOR**		R22	B C 1A	R7621	B C 3B	R7676	A C 2C	ZP2-4	B C 1A	ZP1-28	B C 2A		
C7606	B C 2B	C7636	B C 3B	CN765	B C 2B	Q10	B C 1A	R23	B C 1A	R7622	B C 4B			ZP2-5	B C 1A	ZP1-36	B C 3B		
C7607	B C 2B	C7637	B C 3B	CN766	A C 1A	Q7601	B C 3C	R25	B C 1A	R7623	B C 4B	**OTHER**		ZP2-6	B C 1B	ZP1-40	B C 2A		
C7608	B C 2B	C7641	A C 3B			Q7602	B C 3C	R26	B C 1A	R7624	B C 3B	SW2	A C 3C	ZP2-7	B C 1A	ZP2-10	B C 1A		
C7609	B C 2B	C7643	B C 1B	**DIODE**		Q7603	B C 4C	R28	B C 1A	R7625	B C 3B	SW3	A C 2C	ZP2-8	B C 1A	ZP3-10	B C 1B		
C7613	B C 1B	C7644	B C 1B	D10	B C 1A	Q7604	B C 4C	R29	A C 1A	R7630	B C 1C	SW4	A C 1C	ZP2-9	B C 1A	ZP3-11	B C 1C		
C7614	B C 1B	C7645	B C 3C	D11	B C 1A	Q7605	B C 4B	R30	A C 1A	R7631	A C 3B	SW5	A C 2C	ZP3-7	B C 1C	ZP3-12	B C 2C		
C7615	B C 1B	C7646	B C 1B	D7601	B C 2C	Q7606	B C 4B	R31	A C 1A	R7633	A C 3B	SW6	A C 3B	ZP3-8	B C 1B	ZP3-13	B C 1C		
C7616	B C 2B	C7647	B C 1B	D7602	B C 3C	Q7608	A C 1C	R32	A C 2A	R7634	A C 3B	SW7	A C 2B	ZP3-9	B C 1B	ZP3-14	B C 1B		
C7617	B C 2B	C7651	B C 2B	D7603	A C 3B	Q7609	A C 2C	R33	B C 2A	R7636	B C 1B	SW8	A C 1B	ZP5-1	B C 2B	ZP3-15	B C 1C		
C7618	B C 1B	C7654	B C 1C			Q7610	A C 2C	R7601	B C 1B	R7637	B C 2B	SW7601	A C 4A	ZP5-2	B C 2B	ZP3-16	B C 1B		
C7619	B C 2B	C7655	B C 1C	**IC**		Q7611	B C 4B	R7602	B C 1B	R7638	B C 2B	SW7602	A C 4A	ZP5-3	B C 2B	ZP3-17	B C 1B		
C7620	B C 2B	C7661	B C 2B	IC7601	B C 2B	Q7612	B C 4B	R7603	B C 3B	R7639	B C 3B	TM1	A C 4A	ZP5-9	B C 2A	ZP3-18	B C 1B		
C7621	B C 2B	C7662	B C 2B	IC7602	B C 2C	Q7613	B C 2C	R7608	B C 2C	R7661	B C 1C	TM5	A C 4A	ZP1-10	B C 1A	ZP3-19	B C 1B		
C7622	B C 2B	C7663	B C 2B	IC7606	A C 1C			R7609	A C 1C	R7662	B C 1B	TM13	A C 4A	ZP1-11	B C 1A	ZP3-20	B C 1B		
C7623	B C 2C	C7664	B C 2B			**RESISTOR**		R7610	A C 1C	R7663	B C 4C	TM17	A C 3A	ZP1-12	B C 1A	ZP5-17	B C 2A		
C7624	B C 1C	C7665	B C 2C	**COIL**		R3	A C 3C	R7611	A C 1C	R7665	B C 2C	TP7601	B C 4A	ZP1-13	B C 1A	ZP5-18	B C 2A		
C7626	B C 2C	C7666	A C 2C	L10	B C 1A	R4	A C 2C	R7612	B C 3C	R7666	A C 2C	TP7602	B C 4A	ZP1-14	B C 1A	ZP5-19	B C 3B		

■ BL-2.5 CIRCUIT BOARD

COMPONENT SIDE(A)

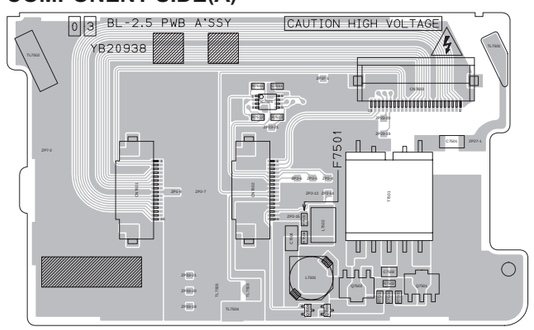

<03> BL-2.5
YB 20938

FOIL SIDE(B)

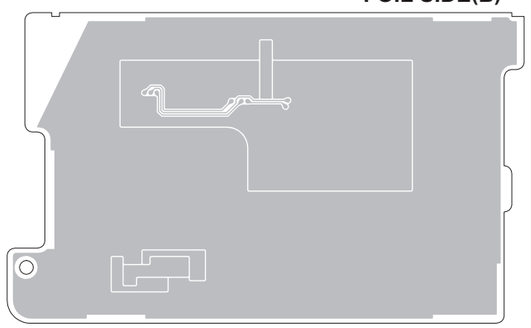

<03> BL-2.5
YB 20938

■ JACK CIRCUIT BOARD

COMPONENT SIDE(A)

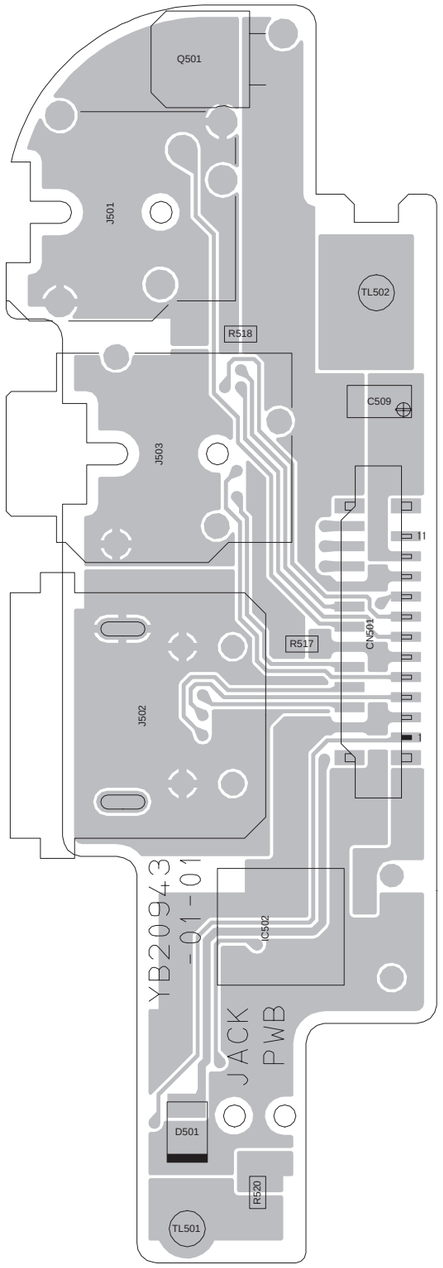

<06> JACK
YB 20943-01-01

FOIL SIDE(B)

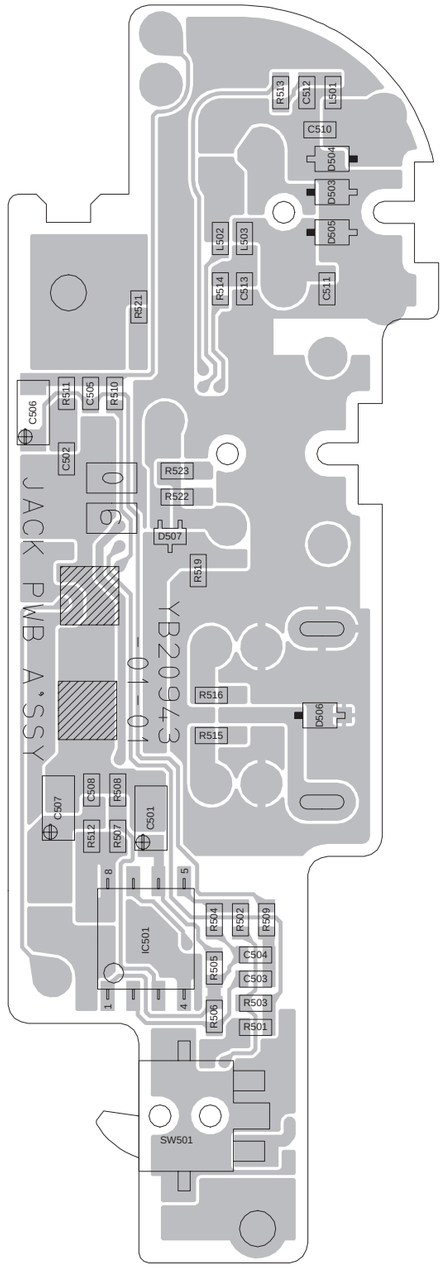

<06> JACK
YB 20943-01-01

■ CCD CIRCUIT BOARD

COMPONENT SIDE(A)

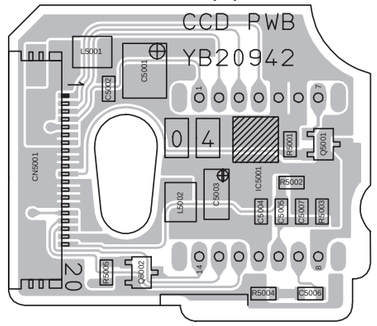

<04> CCD
YB 20942

FOIL SIDE(B)

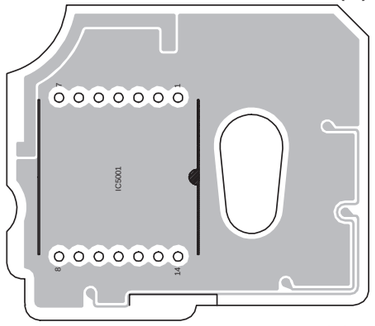

<04> CCD
YB 20942

■ B/W-VF CIRCUIT BOARD

COMPONENT SIDE(A)

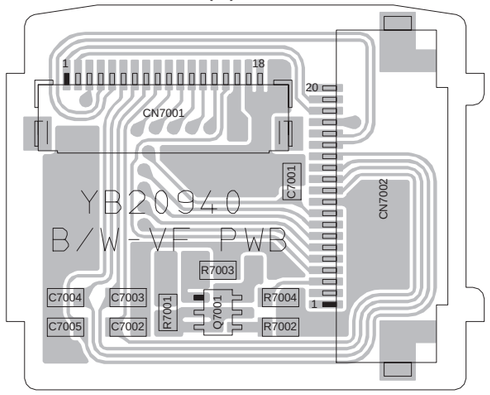

<07> B/W-VF
YB 20940

FOIL SIDE(B)

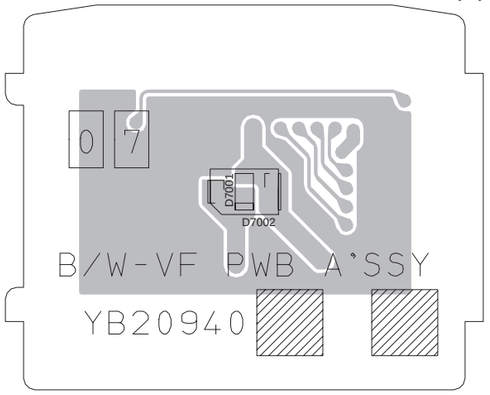

<07> B/W-VF
YB 20940

■ VIDEO BLOCK DIAGRAM (1/2)

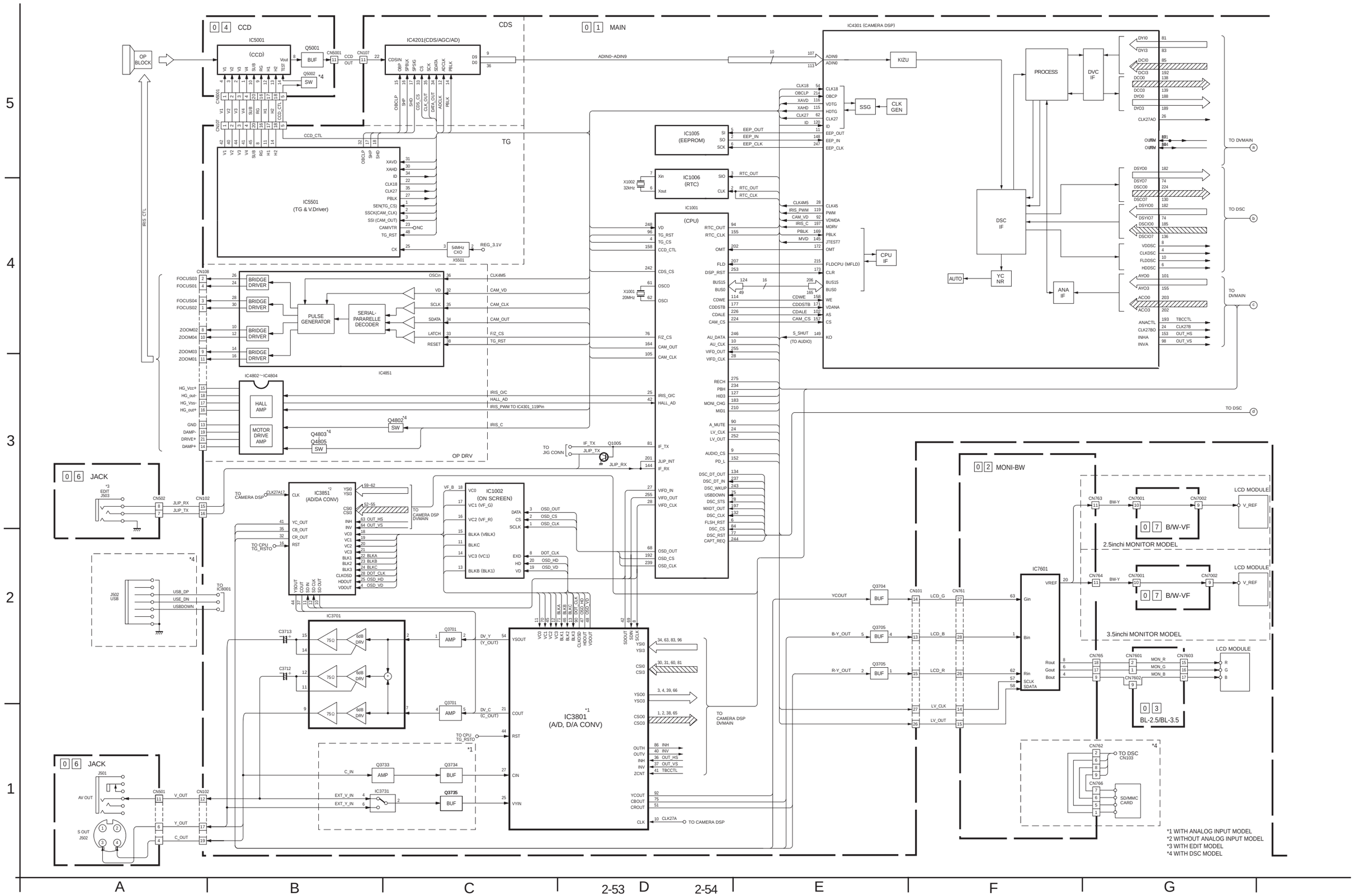

■ VIDEO BLOCK DIAGRAM (2/2)

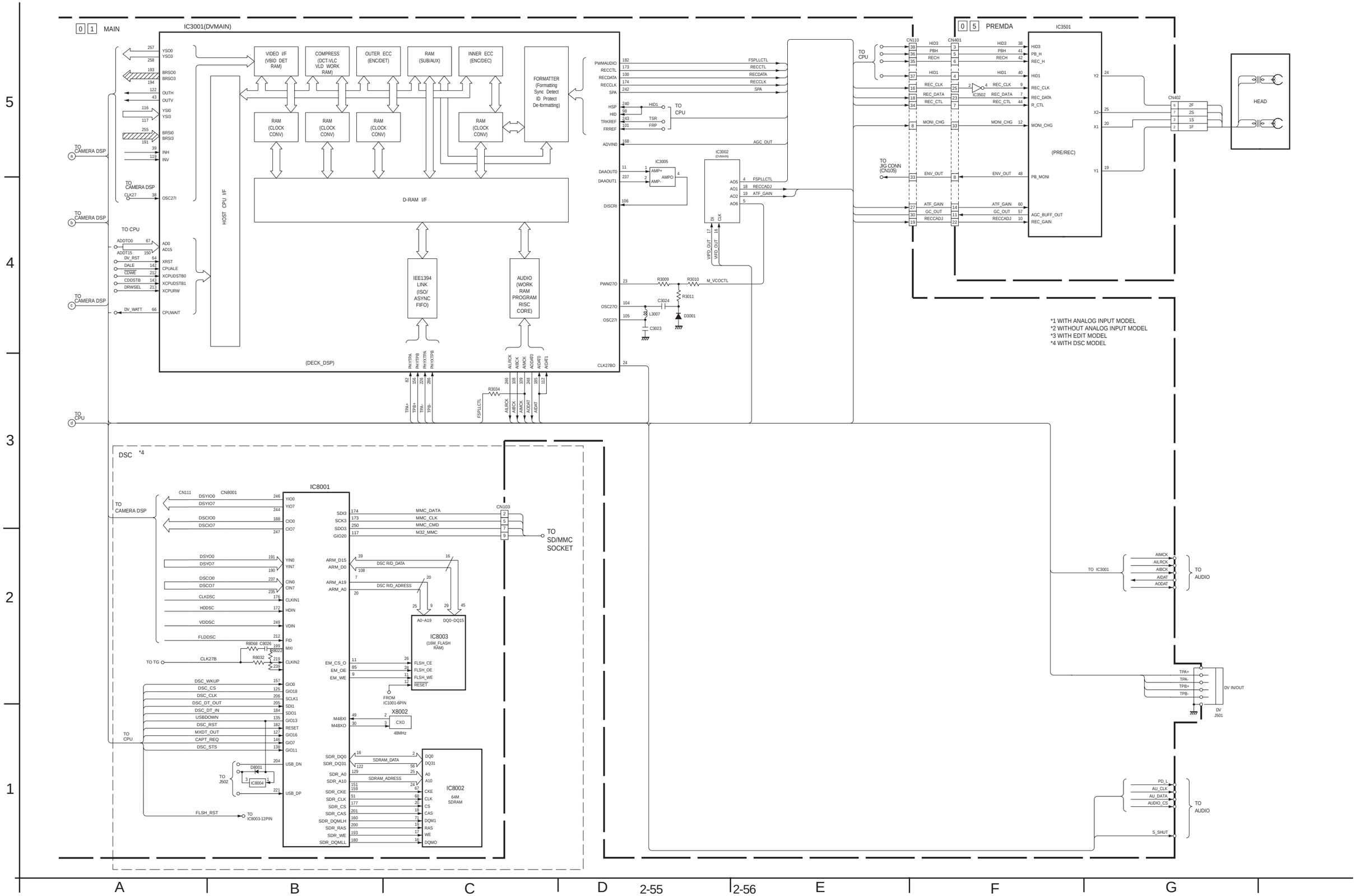

■ POWER SYSTEM BLOCK DIAGRAM

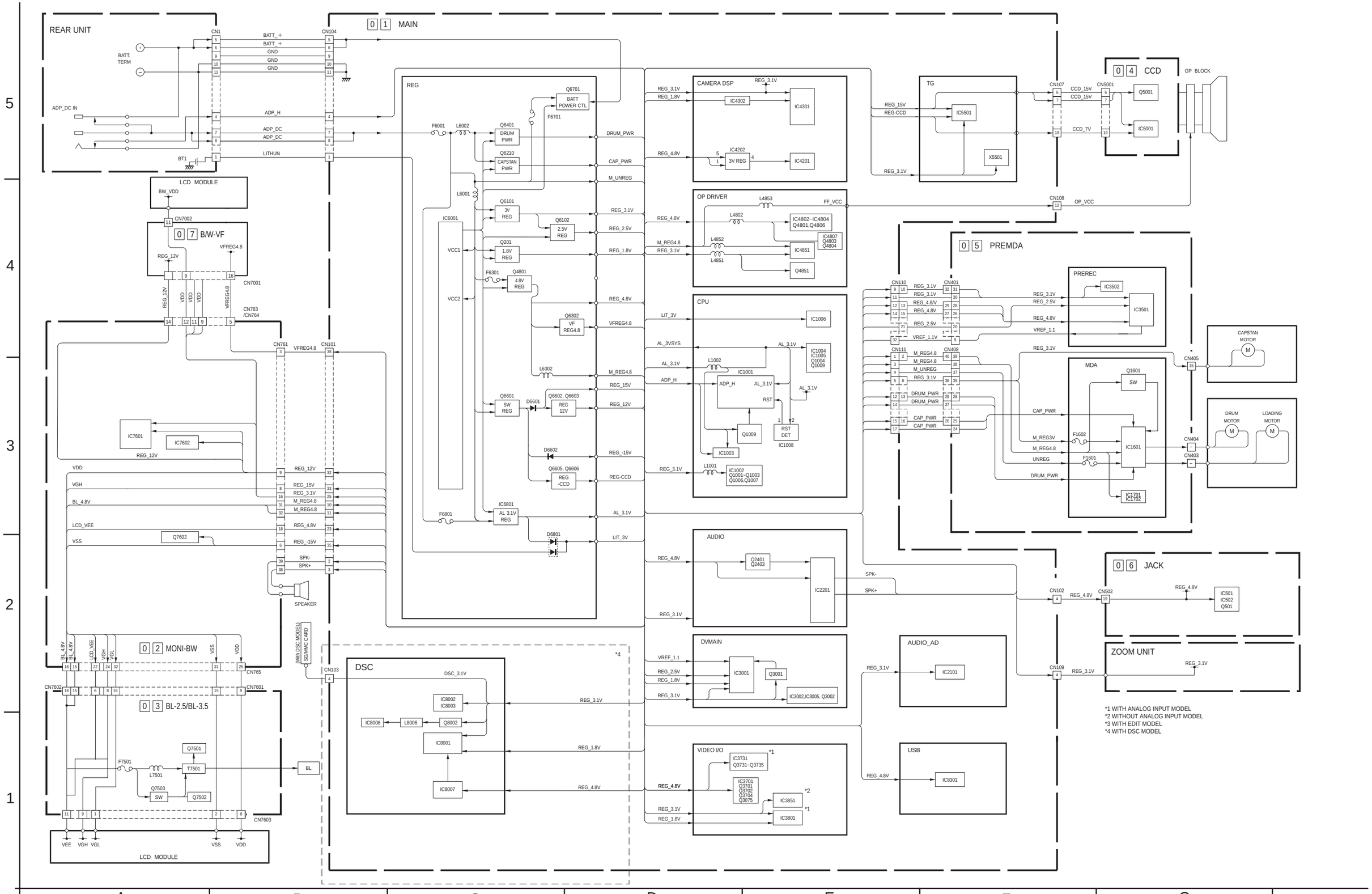

■ VOLTAGE CHARTS

<MAIN IF>

MODE PIN NO.	REC	PLAY
Q2001		
1	0	0
2	0.5	0.5
3	3.0	3.0
4	0	0
5	0	0
6	0	0
Q2002		
1	0	0
2	0	0
3	0	2.9
4	0	0
5	0.5	0
6	0.5	0
Q2003		
1	0	0
2	0.5	0.5
3	3.0	2.3
4	0	0
5	0	0
6	0	0
Q2004		
1	0	0
2	0.5	0
3	2.9	0
4	0	0
5	0	0.5
6	0	0.5
Q2005		
1	0	0
2	0.5	0.5
3	2.9	2.9
4	0	0
5	0	0
6	0	0
Q2006		
1	0	0
2	0.4	0.4
3	2.9	2.9
4	0	0
5	0	0
6	0	0

<USB>

MODE PIN NO.	REC	PLAY
IC8301		
1	4.8	4.8
2	0	0
3	3	3.1
4	0.4	0.8
5	0	0
6	0.5	0.5
7	0.8	1
8	0	0
9	3	3
10	3	3
11	0	0
12	3	3.1
13	3	3
14	3.1	3
15	3.1	3
16	3.1	3.1
17	0	0
18	0	0
19	2.6	2.7
20	2.6	2.7
21	2.6	2.7
22	2.6	2.7
23	2.6	2.7
24	2.6	2.7
25	0	0
26	3.1	3
27	2.6	2.6
28	2.6	2.6
29	0.7	0.9
30	0.7	0.9
31	0.6	0.9
32	0.6	0.9
33	0.6	0.9
34	0.6	0.9
35	0.7	0.8
36	0	0
37	3	3
38	0.6	0.9
39	0	0
40	3.1	3.1
41	3.1	3.1
42	0	0
43	3.1	3.1
44	4.8	4.8
45	0	0
46	0	0
47	0.7	0.8
48	0.5	0.7

<CPU>

MODE PIN NO.	REC	PLAY
IC1001	-	-
IC1002		
1	2.8	2.8
2	2.5	2.5
3	2.7	2.7
4	3	3
5	3.1	3.1
6	3.1	3.1
7	1.4	1.4
8	1.5	1.5
9	0	0
10	0	0
11	0	0
12	0	0
13	0	0
14	0	0
15	0	0
16	0	0
17	0	0
18	0	0
19	3	3
20	2.8	2.8
IC1003		
1	0	0
2	3	3
3	0	0
4	3	3
5	3	3
IC1004		
1	1.2	1.2
2	0	0
3	1.4	1.4
4	0	0
5	3	3
IC1005		
1	3	3
2	0	0
3	3	3
4	0	0
5	3	3
6	3	3
7	3	3
8	3	3
IC1006		
1	0	0
2	3	3
3	3	3
4	0	0
5	3	-
6	0.5	0.5
7	0.4	0.8
8	3	3.2
IC1007		
1	3	3
2	3	3
3	0	0
4	0	0
Q1001		
E	3.1	3.1
C	3.1	3.1
B	3	3
Q1002		
1	0	0
2	3	3
3	0	3.1
4	0	2.9
5	0	0
Q1003		
1	0	0
2	3	0
3	3.1	3.1
4	-0.8	-0.4
5	3.1	3.1
Q1004		
1	0	0
2	3	3
3	3	3
4	3	3
5	0	0
Q1005		
E	0	0
C	1	0.4
B	0	0
Q1006		
1	0	0
2	3	0
3	3.1	3.1
4	3	-0.2
5	0	3.1
Q1007		
E	0	0
C	3.1	3.1
B	0.5	0.5
Q1008		
E	0	0
C	0	0
B	3	0

MODE PIN NO.	REC	PLAY
Q1009		
D	3	3
S	0	0
G	3	3

<AUDIO>

MODE PIN NO.	REC	PLAY
IC2101		
1	0	0
2	0.1	0
3	0.1	0
4	0	0
5	3.1	3.1
6	3.1	3.1
7	0	0
8	0	0
9	0	0
10	0.9	1.1
11	0.4	0.2
12	0.9	1.2
13	0	0
14	0	0
15	0	0
16	0	0
IC2201		
1	0	0
2	0	0
3	0	0
4	3	3
5	3.1	3.1
6	0	0
7	1.5	1.5
8	1.4	1.4
9	1.5	1.5
10	2.9	2.9
11	2.9	2.9
12	3	3
13	1.5	1.5
14	1.5	1.5
15	3	3
16	0	0
17	1.5	1.5
18	2.4	2.4
19	1.5	1.5
20	2.4	2.4
21	1.5	1.5
22	0.2	2.4
23	1.5	1.5
24	0.2	2.4
25	0.9	0.9
26	0	0
27	0	0
28	4.8	4.8
29	0	0
30	2.4	2.4
31	0	0
32	3	3
33	1.5	1.5
34	0.8	1.1
35	0.8	1.1
36	1.5	1.5
37	1.5	1.5
38	1.5	1.5
39	1.5	0.2
40	1.5	0
41	0	0
42	4	4.7
43	2.6	0
44	4	4.4
45	1.5	0.2
46	1.5	0.2
47	1.5	1.5
48	1.5	1.5
Q2202		
1	0	0
2	0	0
3	0	0
4	0	0
5	0	0
6	0	0
Q2401		
E	4	4.7
C	4.8	4.8
B	4.8	4.8
Q2403		
E	3	3
C	4.8	4.8
B	3.7	3.7

<DV MAIN>

MODE PIN NO.	REC	PLAY
IC3001	-	-
IC3002		
1	0	0
2	0.5	0.5
3	0.4	0.4
4	1.7	1.7
5	0.7	0.7
6	2.4	2.4
7	1.2	1.2
8	3.1	3.1
9	3.1	3.1
10	3.1	3.1
11	3.1	3.1
12	2.1	2.1
13	1.1	1.1
14	0	0
15	0	0
16	3	3
17	3	3
18	1.4	1.4
19	1.3	1.3
20	0	0
IC3005		
1	0	0.4
2	0	0.4
3	0	0
4	0.8	1.7
5	0	0
6	0	0
7	0	0
8	0	3.1
Q3001		
E	1.8	1.8
C	2.9	2.9
B	2.4	2.4
Q3002		
E	0.3	1.2
C	3.1	3.1
B	0.8	1.7

<VIDEO I/O>

MODE PIN NO.	REC	PLAY
IC3701		
1	0	0
2	2.3	2.3
3	0	0
4	0	0
5	0	0
6	0	0
7	1.9	1.9
8	0	0
9	2.3	2.3
10	0	0
11	2.1	2.1
12	2.1	2.1
13	4.8	4.8
14	1.9	1.9
15	1.9	1.9
16	4.8	4.8
IC3731		
1	3	3
2	2	2
3	4.8	4.8
4	1.7	1.7
5	0	0
6	2.3	2.3
IC3801	-	-
IC3851	-	-
Q3701		
1	1.2	1.2
2	0.6	0.6
3	0	0
4	1.4	1.4
5	0.8	0.8
6	0	0
Q3702		
1	0.2	0
2	0	0
3	0	0
4	4.8	4.8
5	4.9	4.7
6	4.9	4.7
Q3704		
E	0.9	0.9
C	0	0
B	0.3	0.3
Q3705		
1	0.9	0.9
2	0.3	0.3
3	0	0
4	0.9	0.9
5	0.3	0.3
6	0	0
Q3731		
E	0	0
C	4.8	4.8
B	0	0
Q3732		
E	0	0
C	0	0
B	3	3
Q3733		
1	0	0
2	0.4	0.4
3	0	0
4	4.8	4.8
5	4.8	4.8
6	4.8	4.8
Q3734		
E	0	0
C	4.8	4.8
B	0	0
Q3735		
1	0.1	0.1
2	0.4	0.4
3	0	0
4	2.1	2.1
5	1.5	1.5
6	4.8	4.8

<CDS/DSP>

MODE PIN NO.	REC	PLAY
IC4201		
1	1.2	0
2	1.2	0
3	0.5	0
4	0.2	0
5	0	3
6	0	0
7	0	0
8	0	0
9	1.2	0
10	3	3
11	0	0
12	1.5	1.5
13	3	3
14	2.5	0
15	3	0
16	2.4	0
17	2.5	0
18	0	0
19	3	3
20	1.9	0
21	1.9	0
22	2	0
23	1.9	0
24	1.2	0
25	3	3
26	0	0
27	0	0
28	1.4	0
29	2	0
30	0.9	0
31	3	3
32	0	0
33	3	3
34	3	3
35	3	3
36	1.2	0
IC4202		
1	4.8	4.8
2	0	0
3	1.2	1.2
4	3	3
5	4.8	4.8
IC4301	-	-
IC4302		
1	1.6	1.8
2	0	0
3	1.8	1.8
4	1.8	1.8
5	1.4	1.4

<OP DRIVE>

MODE PIN NO.	REC	PLAY
IC4802		
1	3.1	3.1
2	2.6	2.6
3	2.6	2.6
4	0	0
5	2.6	2.6
6	2.6	2.6
7	2.6	2.6
8	4.8	4.8
IC4803		
1	1.3	1.3
2	0.6	0.6
3	0.6	0.6
4	0	0
5	2.6	2.6
6	2.6	2.6
7	1.6	2.8
8	4.8	4.8
IC4804		
1	1.3	0.3
2	1.6	2.6
3	1.6	0
4	0	0
5	1.5	3
6	1.5	3
7	2	0
8	4.8	4.8
IC4807		
1	1.5	3
2	1.5	3
3	4.8	4.8
4	0	0
5	1.5	3
6	1.5	3
7	4.8	4.8
8	4.8	4.8
IC4851		
1	0	0
2	0.6	0.6
3	0.3	0.3
4	0	0
5	0	0.3
6	0.3	0
7	0	0
8	3.1	3.1
9	4.6	4.6
10	0.6	0.6
11	0	0
12	0.7	0.5
13	4.6	4.6
14	0.7	0.7
15	0	0
16	0.7	0.7
17	0	0
18	0	0
19	0	0
20	0	0
21	0	0
22	0	0
23	4.6	4.6
24	0.8	1.5
25	0	0
26	0.8	1.5
27	4.8	4.6
28	0.8	1.5
29	0	0
30	0.8	1.5
31	3.1	3.1
32	0	0
33	0	0
34	3	3
35	3	3
36	1.5	1.5
37	1.5	1.5
38	3	3
Q4801		
E	0.6	0.6
C	2.1	2.1
B	1.3	1.3
Q4802		
E	0	0
C	1.5	3
B	0	0
Q4803		
E	0	0
C	4.8	4.8
B	0	0
Q4804		
E	4.8	4.8
C	1.5	3
B	4.8	4.8
Q4805		
E	4.8	4.8
C	1.5	3
B	4.8	4.8

MODE PIN NO.	REC	PLAY
Q4806		
E	1.2	0
C	4.8	4.8
B	2	0
Q4851		
E	0	0
C	3.5	3.7
B	0	0

<TG>

MODE PIN NO.	REC	PLAY
IC5501		
1	0	0
2	3	3
3	3	3
4	3	3.1
5	0	0
6	3	3.1
7	0.3	0
8	0.3	0
9	0	0
10	3	3.1
11	1.6	0
12	3	3.1
13	0	0
14	1.3	0
15	0	0
16	3.1	3.1
17	2.3	0
18	2.3	0
19	2.4	0
20	0	0
21	0	0
22	1.2	1.4
23	0	0
24	3	3.1
25	0	0.6
26	3.1	0
27	2.5	0
28	0	0
29	0	0
30	0.3	0
31	0	3
32	3	0
33	3	3.1
34	1.5	0
35	1.3	1.4
36	3	3.1
37	0	0
38	0	0
39	0	0
40	-0.3	0
41	-7.1	0
42	-0.3	15.1
43	15.1	15.1
44	-7.1	15.1
45	-7.1	15.1
46	-7.6	-7.6
47	0	0
48	3	3

<REG>

MODE PIN NO.	REC	PLAY
IC6001		
1	3.1	3.1
2	3	3
3	3	3
4	3	3
5	3	3
6	0	0
7	1.2	1.2
8	11.1	11.1
9	1	1
10	1.2	1.2
11	2.2	2.2
12	0	0
13	0	0
14	0	0
15	0	0
16	0	0
17	0.1	0.1
18	0	0
19	2.2	2.2
20	1	1
21	0	0
22	2.2	2.2
23	1	1
24	0.6	0.6
25	1	1
26	0.6	0.6
27	1	1
28	0.8	0.8
29	1	1
30	0.6	0.6
31	0.3	0.3
32	0.3	0.3
33	0.6	0.6
34	0	0
35	0	0
36	0.5	0.5
37	0.8	0.8
38	0	0
39	1	1
40	0	0
41	2.5	2.5
42	1.1	1.1
43	0	0
44	2.2	2.2
45	2.2	0
46	2.2	2.2
47	6.5	6.5
48	1	1
49	1	1
50	2.6	2.1
51	11.1	11.1
52	0	0
53	9.7	9.7
54	8.8	8.8
55	8	8
56	6	6
57	9.1	9.1
58	7.8	7.8
59	0	0
60	11.1	11.1
61	0	0
62	0	0
63	0.2	0.2
64	2	2
IC6801		
1	11.1	11.1
2	0	0
3	1.2	1.2
4	10.4	10.4
5	11.1	11.1
Q6101		
1	7.8	7.8
2	11.1	11.1
3	0	0
4	3.1	3.1
5	3.1	3.1
Q6102		
E	3.1	3.1
C	2.5	2.5
B	2.6	2.4
Q6201		
1	9	8.6
2	11.1	11.1
3	0	0
4	1.8	2.6
5	1.8	2.6
Q6301		
1	6	6
2	11.1	11.1
3	0	0
4	4.8	4.8
5	4.8	4.8
Q6302		
E	4.8	4.8
C	-0.6	-0.6
B	4.8	4.8

MODE PIN NO.	REC	PLAY
Q6303		
E	0	0
C	4.8	4.8
B	0	0
Q6401		
1	8.5	8.5
2	11.1	11.1
3	0	0
4	2.6	2.6
5	2.6	2.6
Q6501		
1	9.7	9.7
2	11.1	11.1
3	0	0
4	1.2	1.2
5	1.2	1.2
Q6601		
D	11.1	11.1
S	8	8
G	0	0
Q6602		
1	4.3	4.3
2	5.1	5.1
3	14.5	14.5
4	4.3	4.3
5	4.8	4.8
6	15.1	15.1
Q6603		
E	15.1	15.1
C	12	12
B	14.5	14.5
Q6604		
E	0	0
C	15.1	15.1
B	-1	-1
Q6605		
1	0	0
2	-7.6	-7.6
3	-14.5	-14.5
4	-7	-
5	-7.5	-7.5
6	-15	-15
Q6606		
E	-15	-15
C	-7.6	-7.6
B	-14.5	-15
Q6701		
D	11.1	11.1
S	11.1	11.1
G	0	0
Q6801		
1	3.2	3.2
2	3.2	3.2
3	0	0
4	10.9	10.9
5	11.1	11.1

<DSC>

MODE PIN NO.	REC	PLAY
IC8001	-	-
IC8002		
1	3.1	3.1
2	0	0
3	3.1	3.1
4	0	0
5	0	0
6	0	0
7	0	0
8	0	0
9	3.1	3.1
10	0	0
11	0	0
12	0	0
13	0	0
14	0	0
15	3.1	3.1
16	0	0
17	3.1	3.1
18	3.1	3.1
19	3.1	3.1
20	3.1	3.1
21	0	0
22	0	0
23	0	0
24	0	0
25	0	0
26	0	0
27	0	0
28	0	0
29	3.1	3.1
30	0	0
31	0	0
32	0	0
33	0	0
34	0	0
35	3.1	3.1
36	0	0
37	0	0
38	0	0
39	0	0
40	0	0
41	3.1	3.1
42	0	0
43	3.1	3.1
44	0	0
45	0	0
46	0	0
47	0	0
48	0	0
49	3.1	3.1
50	0	0
51	0	0
52	0	0
53	0	0
54	0	0
55	3.1	3.1
56	0	0
57	0	0
58	0	0
59	0	0
60	0	0
61	0	0
62	0	0
63	0	0
64	0	0
65	0	0
66	0	0
67	0	0
68	0	0
69	0	0
70	0	0
71	0	0
72	0	0
73	0	0
74	0	0
75	3.1	3.1
76	0	0
77	0	0
78	0	0
79	0	0
80	0	0
81	3.1	3.1
82	0	0
83	0	0
84	0	0
85	0	0
86	0	0
IC8003		
1	0	0
2	0	0
3	0	0
4	0	0
5	0	0
6	0	0
7	0	0
8	0	0

MODE PIN NO.	REC	PLAY
9	0	0
10	0	0
11	3.1	3.1
12	3	3
13	0	0
14	0	0
15	1.3	1.3
16	0	0
17	0	0
18	0	0
19	0	0
20	0	0
21	0	0
22	0	0
23	0	0
24	3.1	3.1
25	0	0
26	3.1	3.1
27	0	0
28	3.1	3.1
29	0.5	1.1
30	2.5	2.7
31	0.5	1.1
32	2.5	2.7
33	0.5	1.1
34	2.5	2.7
35	0.5	1.1
36	2.5	2.7
37	3.3	3.1
38	0.5	1.1
39	2.5	2.7
40	0.5	1.1
41	2.5	2.7
42	0.5	1.1
43	2.5	2.7
44	0.5	1.1
45	2.5	2.7
46	0	0
47	3.5	3.1
48	0	0
IC8004		
1	0.7	0.7
2	0.5	0.5
3	0	0
4	0	0
IC8006		
1	0.8	0.8
2	0	0
3	0.4	0.4
4	0	0
5	0.8	0.8
6	0	0
7	0.2	0.2
8	0.3	0.3
9	0.2	0.2
10	0.2	0.2
11	0	0
12	0.8	0.8
13	0.2	0.2
14	0.4	0.4
15	0.2	0.2
16	0.3	0.3
IC8007	-	-
Q8001	-	-
Q8002		
E	3.1	3.1
C	0.8	0.8
B	3.1	3.1

<MDA>

MODE PIN NO.	REC	PLAY
IC1601		
1	0.4	0.4
2	0.5	0.5
3	0	0
4	0.5	0.5
5	1.5	1.5
6	1.5	1.5
7	1.5	1.5
8	1.5	1.5
9	1.6	1.6
10	1.5	1.5
11	2.8	2.8
12	1.2	1.2
13	1.6	1.6
14	1.5	1.5
15	1.5	1.5
16	1.5	1.5
17	1.6	1.6
18	3.1	3.1
19	0.7	0.7
20	0.4	0.4
21	1.3	1.3
22	1.3	1.3
23	11.1	11.1
24	2.6	2.6
25	0.7	0.7
26	1.3	1.3
27	0.7	0.7
28	1	1
29	1.2	1.2
30	1.2	1.2
31	1.2	1.2
32	0	0
33	1.2	1.2
34	1.5	1.5
35	0	0
36	0	0
37	0	0
38	0	0
39	4.6	4.6
40	-	-
41	-	-
42	1.5	1.5
43	1.5	1.5
44	14	14
45	2.3	2.3
46	12.5	12.5
47	0	0
48	0	0
49	3	3
50	3	3
51	0	0
52	1.2	1.2
53	0.2	0.2
54	1.5	1.5
55	0.7	0.7
56	0.9	0.9
IC1701		
1	-	-
2	1.5	1.5
3	1.5	1.5
4	0	0
5	1.4	1.4
6	1.5	1.5
7	-	-
8	4.6	4.6
IC1702		
1	-	-
2	1.5	1.5
3	-	-
4	0	0
5	-	-
6	1.5	1.5
7	-	-
8	4.6	4.6
Q1601		
1	0	0
2	0	0
3	4.6	4.6
4	0	0
5	4.6	4.6

<PRE/REC>

MODE PIN NO.	REC	PLAY
IC3501		
1	0	0
2	0.5	0.5
3	0	0
4	0	1.5
5	2.5	2.5
6	2.4	1.6
7	1.4	0
8	0	0
9	1.3	3.1
10	1.3	1.5
11	3.1	3.1
12	0	0
13	4.8	4.8
14	0	0
15	0	0
16	0	0
17	0	0
18	3.8	1.7
19	3.6	1.7
20	3.6	1.7
21	3.8	1.7
22	0	0
23	3.8	1.6
24	3.6	1.7
25	3.6	1.6
26	3.8	1.6
27	0	0
28	2.3	2.3
29	3.6	1.7
30	3.6	1.7
31	2.2	2.2
32	0	0
33	0	0
34	0	0
35	1.8	1.8
36	0.4	0.4
37	3.1	3.1
38	0	3
39	3.1	3.1
40	1.5	1.5
41	0	3
42	3	3
43	4.8	4.8
44	3.1	0
45	0	0
46	0	2
47	0	2
48	4.7	3.1
49	4.4	2.9
50	0.5	1.6
51	1.2	1.3
52	0.9	1.6
53	0	0
54	3.1	2.6
55	2.5	1.9
56	1.1	1.1
57	2.5	1.9
58	2.5	1.3
59	0	0
60	1.3	1.3
61	3.3	1.9
62	2.6	1.9
63	2.5	1.4
64	2.5	1.9
IC3502		
1	1.4	0
2	1.4	0
3	0	0
4	0.7	3.1
5	3.1	3.1

<JACK>

MODE PIN NO.	REC	PLAY
IC501		
1	2	2
2	2	2
3	2	2
4	0	0
5	2	2
6	2	2
7	1.5	1.5
8	4.8	4.8
IC502		
1	4.5	4.5
2	0	0
3	4.7	4.7
Q501		
E	0	0
C	4.3	4.3
B	-	-

<MONI BW>

MODE PIN NO.	EE
IC7601	
1	2.7
2	7.2
3	2.4
4	2.5
5	2.4
6	2.5
7	2.4
8	2.5
9	2.4
10	0
11	0
12	5.4
13	0.2
14	0.2
15	0.2
16	12
17	0
18	0
19	2.5
20	0.1
21	6.1
22	1.7
23	0
24	0
25	0
26	1.5
27	0
28	1.5
29	0
30	1.4
31	3.1
32	3.1
33	0.9
34	0
35	1.5
36	3.1
37	0
38	0
39	2.7
40	0
41	0
42	0
43	0
44	0.4
45	0
46	1.3
47	0
48	1.5
49	3.1
50	0
51	0
52	1.5
53	3.1
54	2.9
55	0
56	0
57	3
58	3
59	3.1
60	0
61	3.1
62	2.7
63	2.7
64	0
IC7602	
1	9
2	4.8
3	4.8
4	0
5	4.8
6	4.8
7	7.2
8	12
Q7601	
E	-10.4
C	0
B	-10
Q7602	
E	-9.4
C	-15
B	-10
Q7603	
E	-9.8
C	-0.2
B	-9.4
Q7604	
E	-9.8
C	-14.1
B	-10.5
Q7608	-
Q7609	-
Q7610	-
Q7611	
E	0
C	4.8
B	0

MODE PIN NO.	EE
Q7612	
E	4.8
C	1.1
B	4.8

<BL 2.5>

MODE PIN NO.	EE
Q7501	
E	0
C	4.3
B	0.4
Q7502	
E	0
C	4.3
B	0.4
Q7503	
E	4.4
C	4.3
B	0
Q7504	
E	0
C	0
B	3.0

<CCD>

MODE PIN NO.	EE
IC5001	
1	-7.2
2	-7.2
3	-0.3
4	-0.3
5	0
6	0
7	12
8	15.1
9	13.9
10	8
11	-7.6
12	1.6
13	1.3
14	8
Q5001	
E	11.2
C	15.1
B	12
Q5002	
E	0
C	8
B	0

VICTOR COMPANY OF JAPAN, LIMITED
AV & MULTIMEDIA COMPANY CAMCORDER CATEGORY 12, 3-chome, Moriya-cho, kanagawa-ku, Yokohama, kanagawa-prefecture, 221-8528, Japan

(No.86733)

Printed in Japan
200304WPC

PARTS LIST

SAFETY PRECAUTION

Parts identified by the ⚠ symbol are critical for safety. Replace only with specified part numbers.

BEWARE OF BOGUS PARTS

Parts that do not meet specifications may cause trouble in regard to safety and performance. We recommend that genuine JVC parts be used.

1. EXPLODED VIEW

1.1 PACKING AND ACCESSORY ASSEMBLY <M1>

The instruction manual to be provided with this product will differ according to the destination.

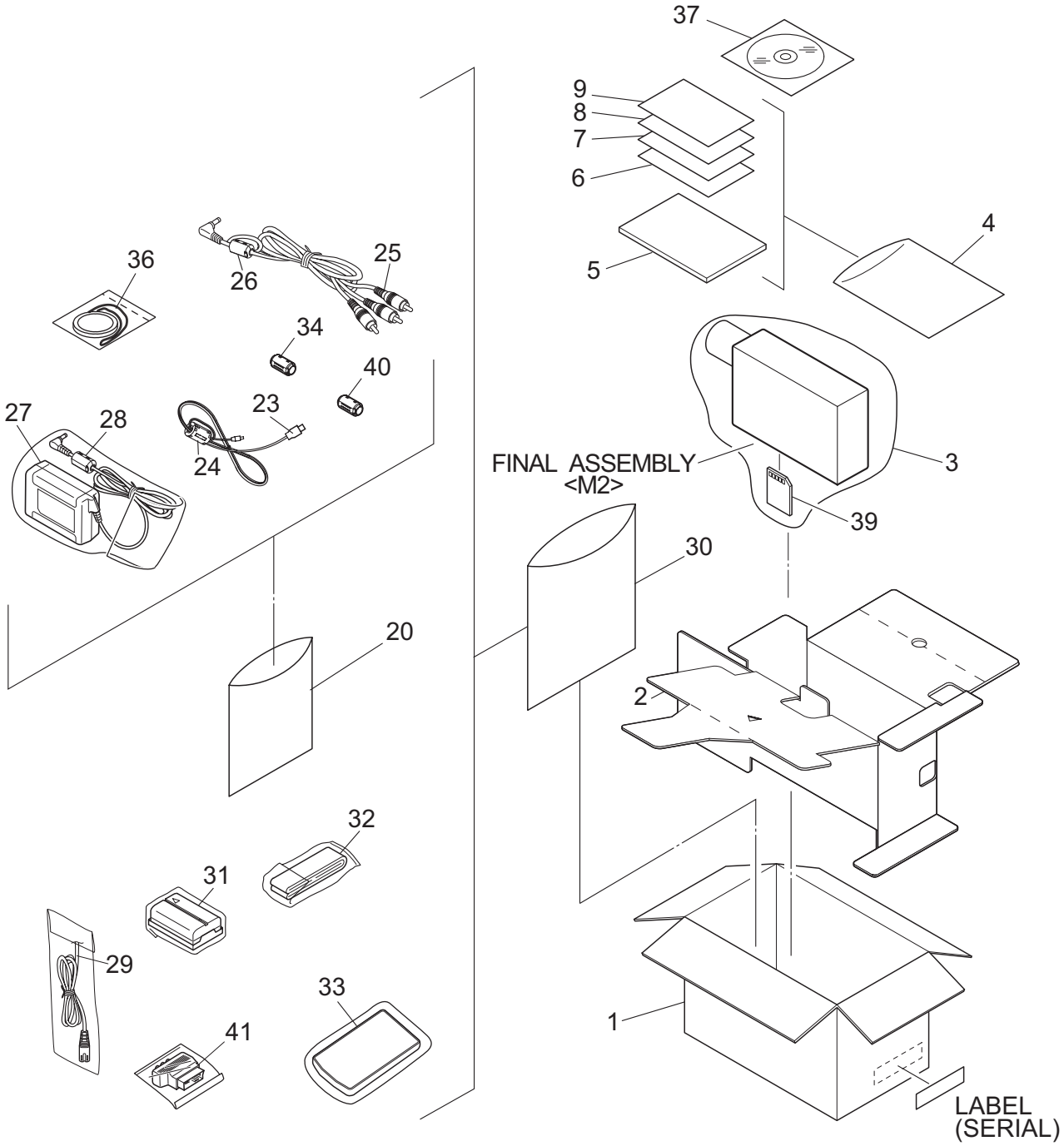

1.2 FINAL ASSEMBLY <M2>

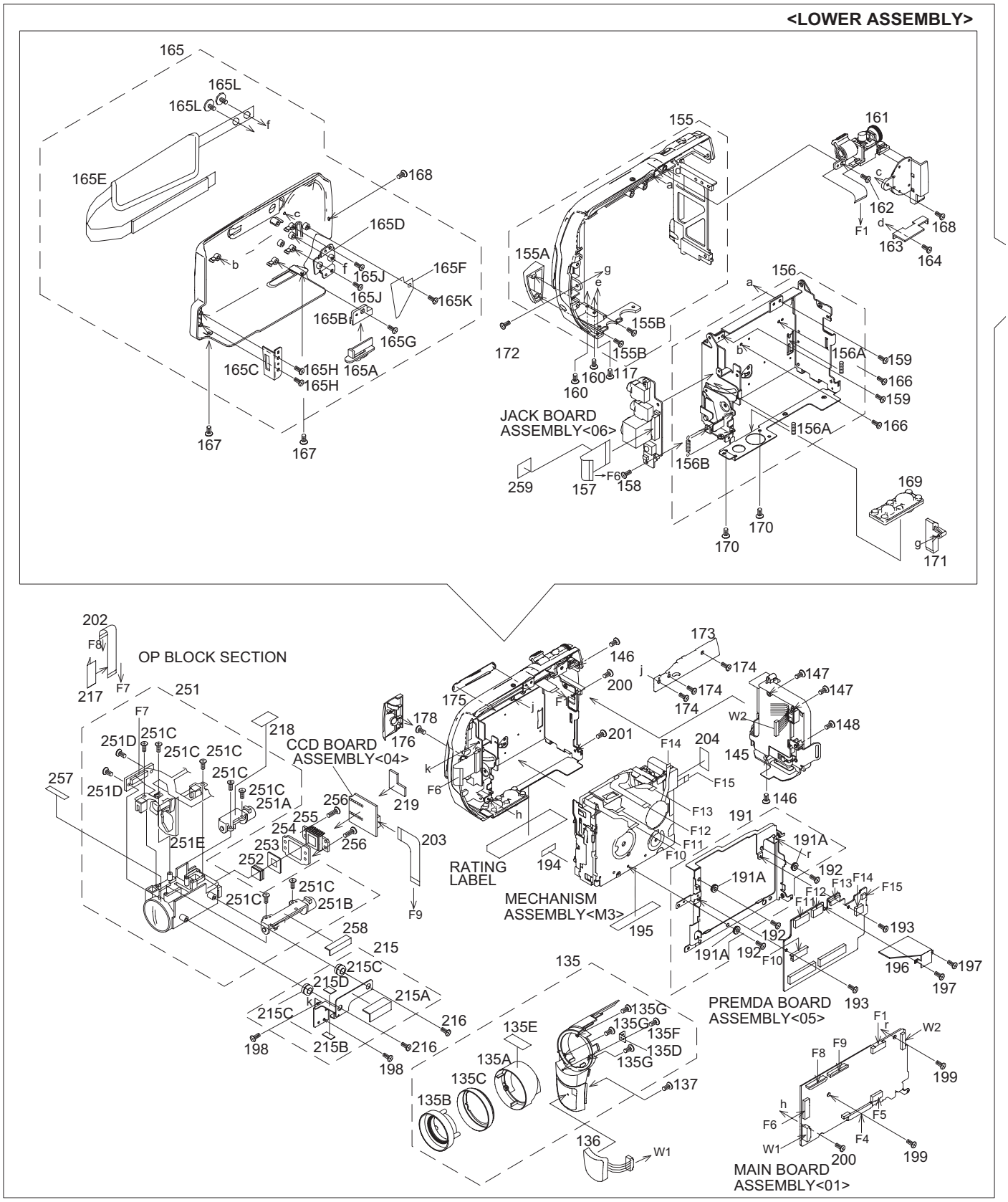

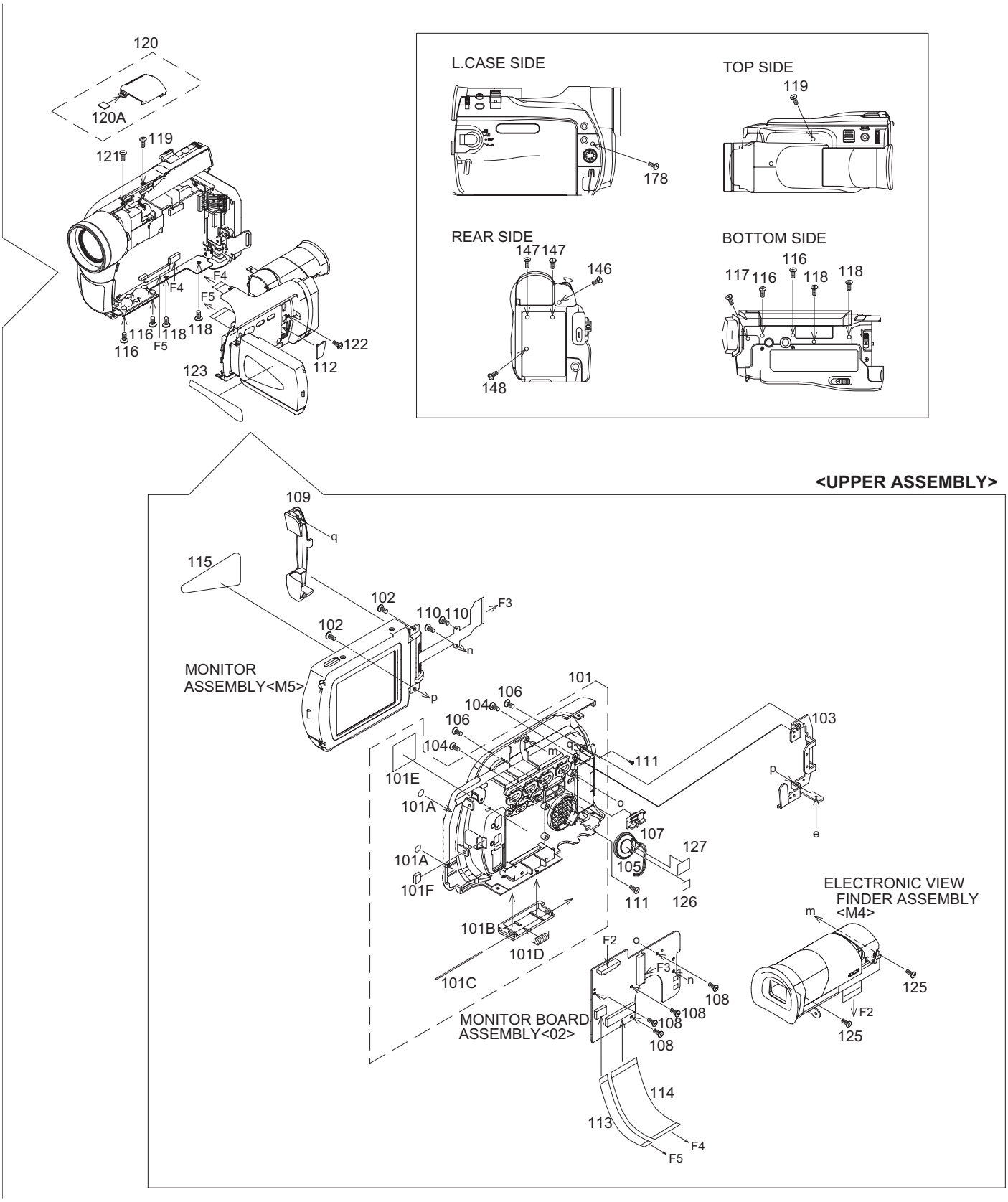
120
120A
119
121
F4
F5
116
118
122
112
123
L.CASE SIDE
178
TOP SIDE
119
REAR SIDE
147
146
148
BOTTOM SIDE
116
117
118
<UPPER ASSEMBLY>
109
q
115
102
110
F3
n
MONITOR
ASSEMBLY<M5>
p
101
106
104
103
m
111
101E
101A
o
107
127
105
101F
126
e
ELECTRONIC VIEW
FINDER ASSEMBLY
<M4>
101B
101D
101C
F2
F3
108
125
MONITOR BOARD
ASSEMBLY<02>
114
113
F4
F5

1.3 MECHANISM ASSEMBLY <M3>

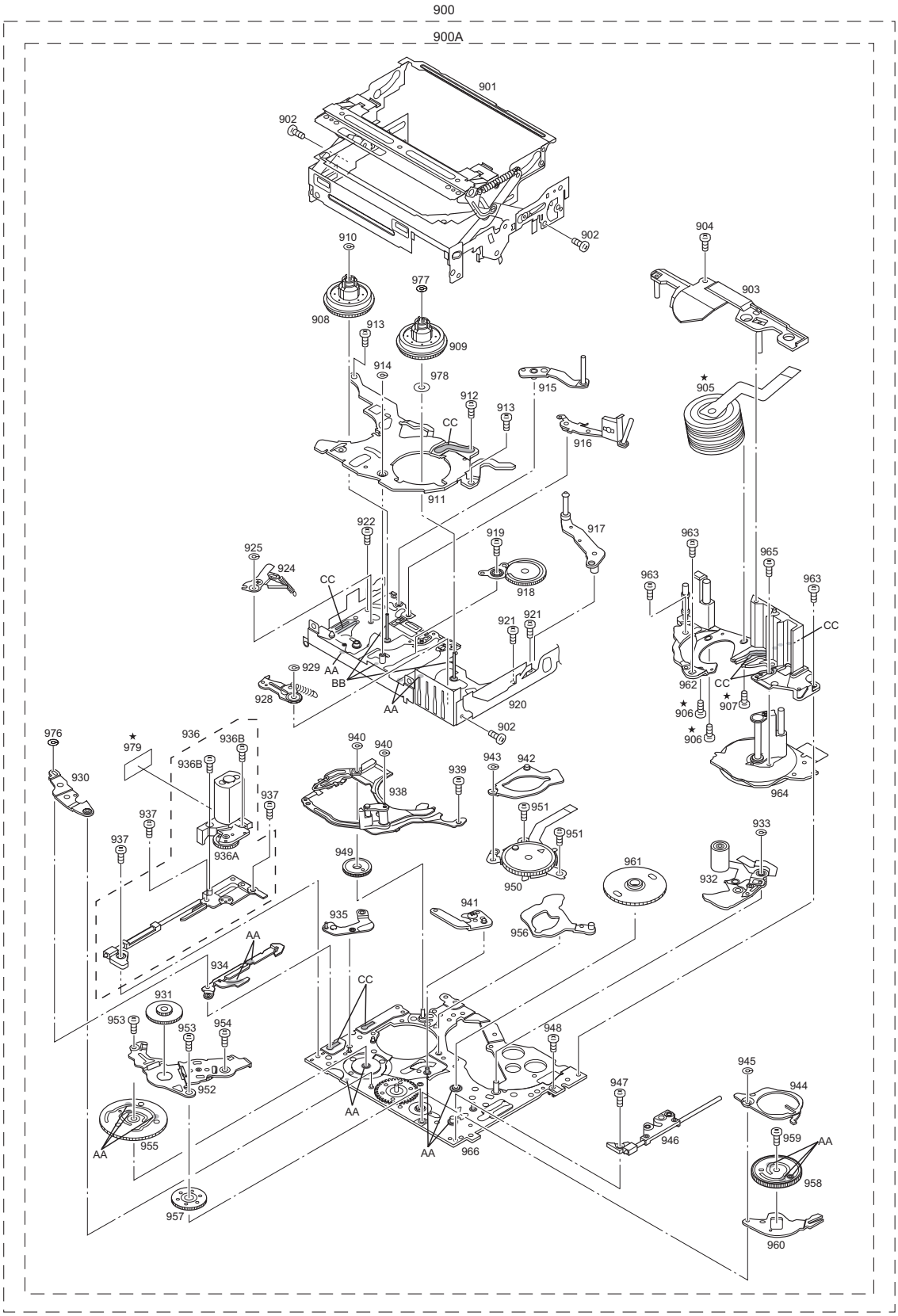

Classification	Part No.	Symbol in drawing
Grease	KYODO-SH-JB	AA
Oil	YTU94027	BB
Grease (HANARL)	RX-410R	CC

NOTE1: The section marked in **AA** and **BB**, **CC** indicate lubrication and greasing areas.

NOTE2: Mark ⋆ is not contained in 900A.

1.4 ELECTRONIC VIEWFINDER ASSEMBLY <M4>

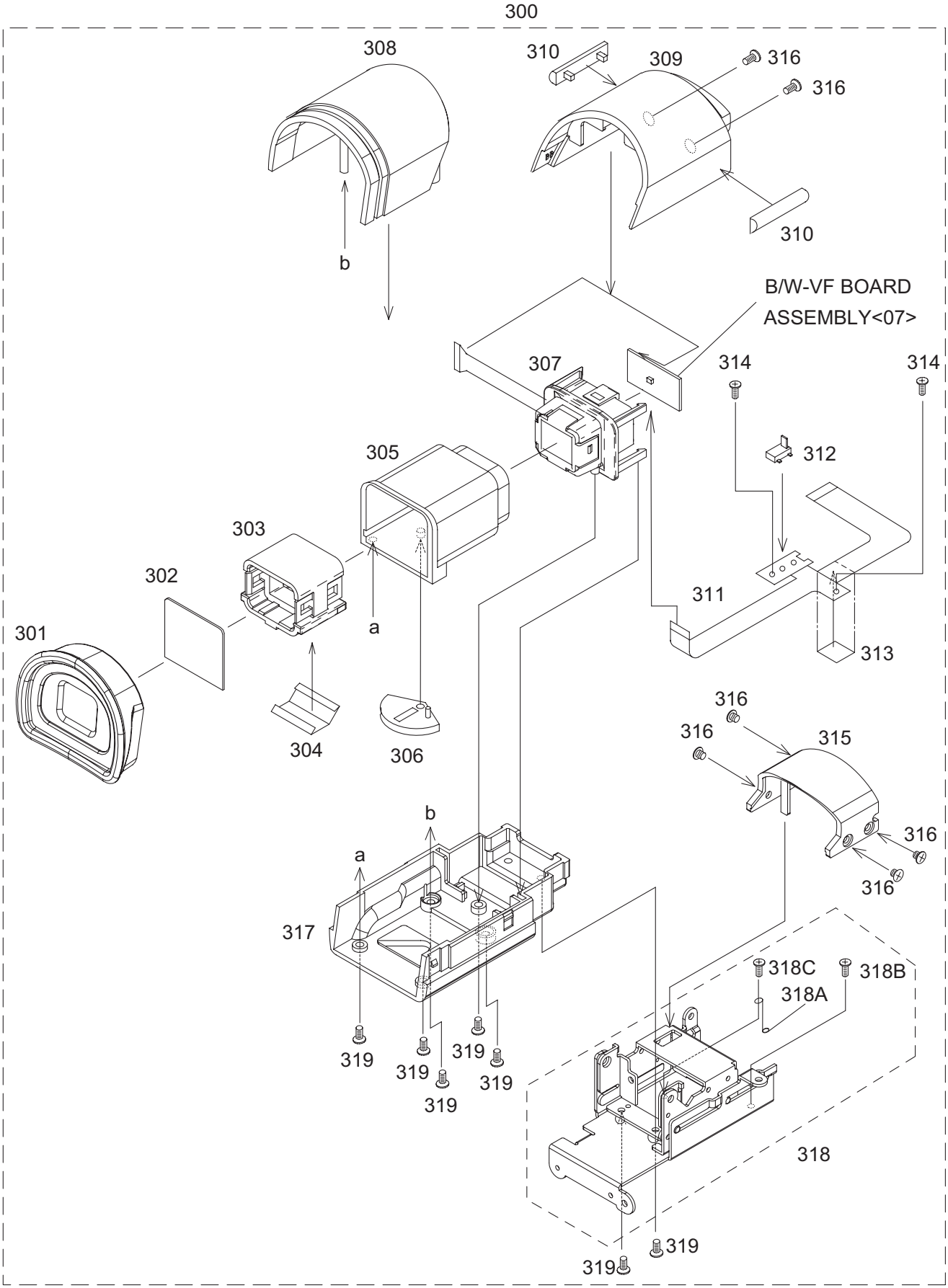

1.5 MONITOR ASSEMBLY (2.5 INCH) <M5>

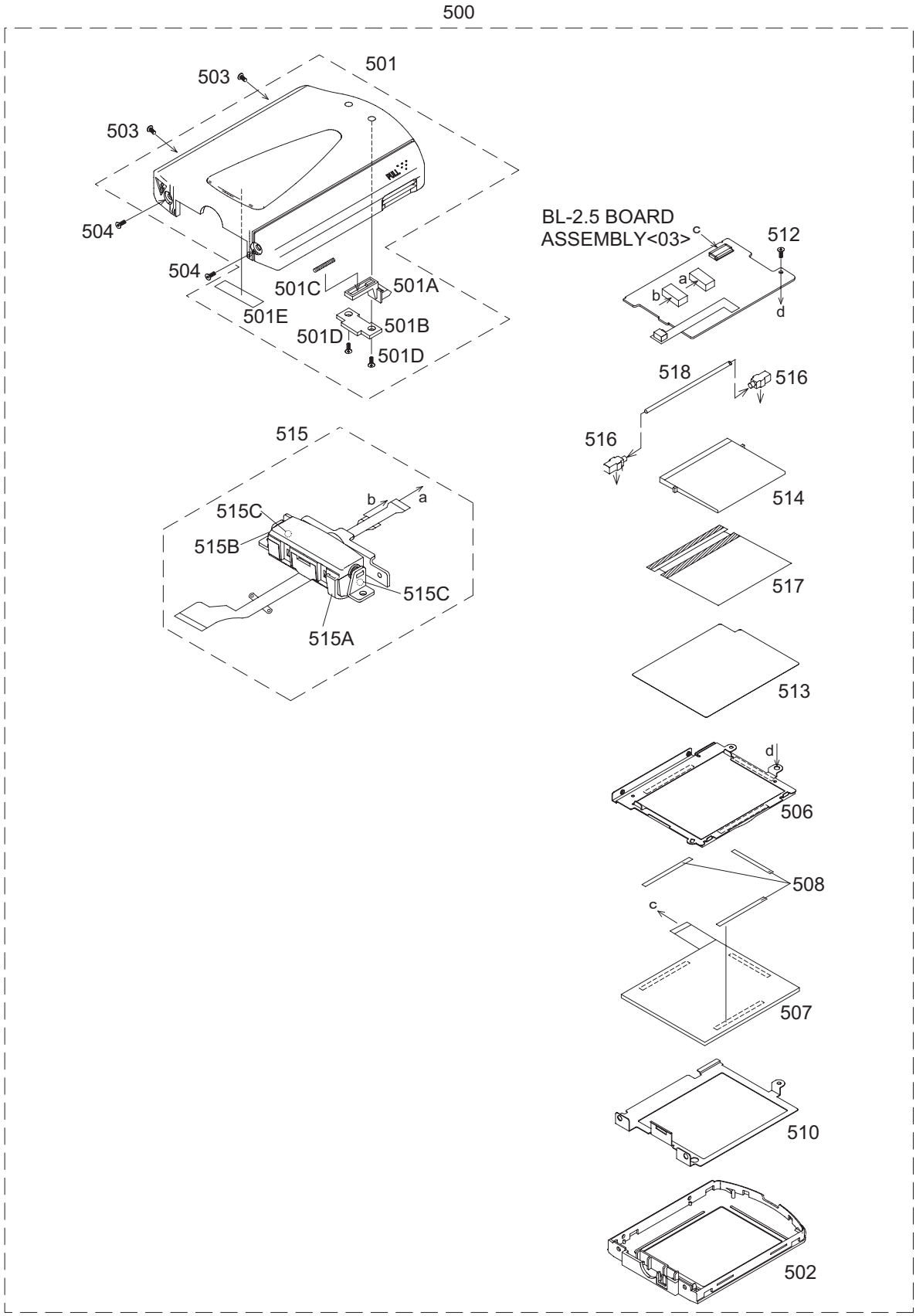

MODEL	MARK	MODEL	MARK
GR-D70EK	A	GR-D70EY	C
GR-D70EX	B	GR-D70EZ	D

2. PARTS LIST

PACKING AND ACCESSORY ASSEMBLY <M1>

⚠ Symbol No.	Part No.	Part Name	Description	Local
1	LY33063-013A	PACKING CASE		
2	LY33065-001B	CUSHION		A
2	LY33065-001C	CUSHION		B,C,D
3	LY30023-027A	POLY BAG		
4	YQM30061-3	POLY BAG		A
4	QPA02003506	POLY BAG	20cm x 35cm	B,C,D
⚠ 5	LYT1145-001A	INST BOOK	(ENGLISH)	A
⚠ 5	LYT1145-003A	INST BOOK	(FRENCH)	B
⚠ 5	LYT1145-004A	INST BOOK	(DUTCH)	B
⚠ 5	LYT1145-005A	INST BOOK	(SPANISH)	B
⚠ 5	LYT1145-006A	INST BOOK	(ITALIAN)	B
⚠ 5	LYT1145-002A	INST BOOK	(GERMAN)	B,C
⚠ 5	LYT1145-007A	INST BOOK	(DANISH)	C
⚠ 5	LYT1145-008A	INST BOOK	(FINNISH)	C
⚠ 5	LYT1145-009A	INST BOOK	(SWEDISH)	C
⚠ 5	LYT1145-010A	INST BOOK	(NORWEGIAN)	C
⚠ 5	LYT1145-011A	INST BOOK	(RUSSIAN)	D
⚠ 5	LYT1145-012A	INST BOOK	(CZECH)	D
⚠ 5	LYT1145-013A	INST BOOK	(POLISH)	D
⚠ 5	LYT1145-014A	INST BOOK	(HUNGARIAN)	D
6	LYT1085-001A	INST BOOK	(SOFT.ENGLISH)	A
6	LYT1085-003A	INST BOOK	(SOFT.FRENCH)	B
6	LYT1085-004A	INST BOOK	(SOFT.DUTCH)	B
6	LYT1085-005A	INST BOOK	(SOFT.SPANISH)	B
6	LYT1085-006A	INST BOOK	(SOFT.ITALIAN)	B
6	LYT1085-002A	INST BOOK	(SOFT.GERMAN)	B,C
6	LYT1085-007A	INST BOOK	(SOFT.DANISH)	C
6	LYT1085-008A	INST BOOK	(SOFT.FINNISH)	C
6	LYT1085-009A	INST BOOK	(SOFT.SWEDISH)	C
6	LYT1085-010A	INST BOOK	(SOFT.NORWEGIAN)	C
6	LYT1085-011A	INST BOOK	(SOFT.RUSSIAN)	D
7	BT-54008-4	WARRANTY CARD		A
7	BT-54013-5	WARRANTY CARD		B,C,D
8	YU30878	REGIST. CARD		A
9	LYT0194-001B	Q.CARD(JUK)		A
20	QPA01703005	POLY BAG	17cm x 30cm	
23	QAM0451-001	USB CABLE		
24	QQR0491-002	FERRITE CORE	TDK (BLACK)	
25	QAM0212-001	A/V CABLE		
26	QQR0918-002	CORE FILTER		
⚠ 27	LY20955-001C	AC ADAPTER	AP-V13E	
⚠ 27 or	LY20956-001B	AC ADAPTER	AP-V11E	
28	QQR0917-002	CORE FILTER		
⚠ 29	QMPP110-190-JR	POWER CORD(EK)	1.9m BLACK	A
⚠ 29	QMPL120-190-JR	POWER CORD(EU)	1.9m BLACK	B,C,D
30	QPA02503505P	POLY BAG	25cm x 35cm	
⚠ 31	LY32566-001A	BATT.PACK ASSY	BN-V408U-B	
32	LY20186-004A	SHOULDER STRAP		
33	LY21020-001A	REMOCON	RM-V718U	
34	QQR0491-002	FERRITE CORE	TDK (BLACK)	
36	LY44002-001B	CAP(HOOD)ASSY		
37	LY32210-051A	CD ROM ASSY		
39	QAM0404-002	MEMORY CARD*		
40	QQR0491-002	FERRITE CORE	TDK (BLACK)	
41	QAM0302-001	ADAPTOR PLUG		

***NOTE:**

DATA FILE is not contained in MEMORY CARD of the service part.

FINAL ASSEMBLY <M2>

⚠ Symbol No.	Part No.	Part Name	Description	Local
101	LY20941-004M	U.CASE(2.5)ASSY		
101A	LY40664-001A	SPACER	(x2)	
101B	LY33051-001D	COVER(SD)		
101C	LY43977-001A	SHAFT		
101D	LY43978-001A	SPRING		
101E	LY33042-001A	C.LABEL(VF)		
101F	LY30030-0F2A	SPACER(A)		
102	LY30018-0D6A	SPECIAL SCREW	(x2)	
103	LY33044-001D	BKT(HINGE2.5)		
104	LY30018-096A	SPECIAL SCREW	(x2)	
105	QAS0126-001	SPEAKER		
106	LY30018-017A	SPECIAL SCREW	(x2)	
107	LY33048-001A	KNOB(SLIDE)		
108	LY30018-059A	SPECIAL SCREW	(x4)	
109	LY33049-002A	COVER(UPPER2.5)		
110	LY30018-056A	SPECIAL SCREW	(x2)	
111	LY30018-0E6A	SPECIAL SCREW	(x2)	
112	LY33050-002C	COVER(JIG)		
113	QUQ105-1007AA	FFC WIRE MONI CN 762-MAIN CN103		
114	QUQ105-4007AA	FFC WIRE MONI CN761-MAIN CN101		
115	LY33009-001A	ORNAMENT(2.5 1)		
116	LY30018-0E6A	SPECIAL SCREW	(x2)	
117	LY30018-0A1A	SPECIAL SCREW		
118	LY30018-096A	SPECIAL SCREW	(x2)	
119	LY30018-096A	SPECIAL SCREW		
120	LY33025-001B	TOP COVER ASSY		
120A	LY40162-001A	BKT		
121	LY30018-096A	SPECIAL SCREW		
122	LY30018-096A	SPECIAL SCREW		
123	LY44187-003A	STICKER(2)		
125	LY30018-0E6A	SPECIAL SCREW	(x2)	
126	LY30030-0E3B	SPACER(A)		
127	LY30030-0E5A	SPACER(A)		
135	LY20943-002E	F.COVER ASSY		
135A	LY33056-001B	HOOD		
135B	LY33057-001A	RING		
135C	LY33058-001A	HOOD(SCREW)		
135D	LY33059-001B	BKT(FRONT)		
135E	LY44186-002A	STICKER(1)		
135F	LY30018-0E6A	SPECIAL SCREW		
135G	LY30018-052A	SPECIAL SCREW	(x3)	
136	LY20944-001B	MIC		
137	LY30018-0G6A	SPECIAL SCREW		
⚠ 145	LY20938-001E	REAR UNIT		
146	LY30018-0G6A	SPECIAL SCREW	(x2)	
147	LY30018-0J1A	SPECIAL SCREW	(x2)	
148	LY30018-0H3A	SPECIAL SCREW		
155	LY20935-002E	LOWER CASE ASSY		
155A	LY33402-001A	COVER(LOWER)		
155B	LY30018-0E6A	SPECIAL SCREW	(x2)	
156	LY20939-001F	ARM ASSY		
156A	LY30002-046B	COMPRES. SPRING	(x2)	
156B	LY43973-001A	TENSION SPRING		
157	QUQ105-2203AA	FFC WIRE JACK CN501-MAIN CN102		
158	LY30018-096A	SPECIAL SCREW		
159	LY30018-059A	SPECIAL SCREW	(x2)	
160	LY30018-096A	SPECIAL SCREW	(x2)	
161	LY10453-001E	ZOOM UNIT		
162	LY30018-0E6A	SPECIAL SCREW		
163	LY33395-001A	BRACKET(ZOOM)		
164	LY30018-059A	SPECIAL SCREW		
165	LY20937-003B	C.COVER ASSY		
165A	LY33027-001B	KNOB(LOCK)		
165B	LY33028-001A	HOLDER(LOCK)		
165C	LY33397-001A	HOOK(G.B)		
165D	LY33039-001A	BKT(G.BELT)		
165E	LY20945-003A	GRIP BELT		
165F	LY44178-001A	SHEET(C.COV)		
165G	LY30018-0E6A	SPECIAL SCREW		
165H	QYSLSF2040D	TAP SCREW	2mm x 4mm(x2)	
165J	QYSLSF2040D	TAP SCREW	2mm x 4mm(x2)	
165K	QYSLSF2040D	TAP SCREW	2mm x 4mm	
165L	LY30018-0H1A	SPECIAL SCREW	(x2)	
166	LY30018-0K3A	SPECIAL SCREW	(x2)	
167	LY30018-096A	SPECIAL SCREW	(x2)	
168	LY30018-059A	SPECIAL SCREW	(x2)	
169	LY31019-001A	BASE		
170	LY30018-0E6A	SPECIAL SCREW	(x2)	
171	LY33396-001B	HOLDER(JACK)		
172	LY30018-0E6A	SPECIAL SCREW		
173	LY33037-001B	COVER(ZOOM)		
174	LY30018-084A	SPECIAL SCREW	(x3)	
175	LY33029-001B	COVER(ADJUST)		
176	LY33024-001C	COVER(JACK)		
178	LY30018-017A	SPECIAL SCREW		
191	LY33019-001B	BKT(MECHA)ASSY		

MODEL	MARK	MODEL	MARK
GR-D70EK	A	GR-D70EY	C
GR-D70EX	B	GR-D70EZ	D

⚠ Symbol No.	Part No.	Part Name	Description	Local
191A	LY42796-003A	BUSH	(x3)	
192	LY30019-028A	SPECIAL SCREW	(x3)	
193	LY30018-056A	SPECIAL SCREW	(x2)	
194	LY40699-002A	LABEL(PUSH)		
195	LY32001-002A	LABEL(HOUSING)		
196	LY33388-001C	SHIELD COVER(PR)		
197	QYSPSPT1414M	SCREW	1.4mm x 1.4mm(x2)	
198	LY30018-096A	SPECIAL SCREW	(x2)	
199	LY30019-038A	SPECIAL SCREW	(x2)	
200	LY30018-096A	SPECIAL SCREW	(x2)	
201	LY30018-017A	SPECIAL SCREW		
202	QUQ105-24X8AA	FPC WIRE OP BLOCK-MAIN CN108		
203	QAL0465-001	FPC CCD CN501-MAIN CN1		
215	LY43965-001D	BKT(OP)ASSY		
215A	LY30030-095A	SPACER(A)		
215B	LY30030-096A	SPACER(A)		
215C	LY43966-001A	RUBBER(OP)	(x2)	
215D	LY30030-0E5A	SPACER(A)		
216	LY30018-0G9A	SPECIAL SCREW	(x2)	
217	LY30030-057A	SPACER(A)		
218	LY30030-050A	SPACER(A)		
219	LY30030-060A	SPACER(A)		
251	LY33085-001F	OP BLOCK ASSY		
251A	LY30724-001B	FOCUS MOTOR		
251B	LY30723-001B	ZOOM MOTOR		
251C	PTY33085-001	SCREW	(x7)	
251D	PTY31727-116	SCREW	(x2)	
251E	PTY33085-007	IRIS MOTOR UNIT		
252	LY44120-001A	OP LPF		
253	LY44005-001A	SHEET		
254	LY33288-001A	SPACER		
255	LYH30446-002A	CCD BASE ASSY		
256	LY30018-0E7A	SPECIAL SCREW	(x2)	
257	LY30030-093A	SPACER(A)		
258	LY30030-094A	SPACER(A)		
259	LY30029-0Q7A	SPACER(A)		

MECHANISM ASSEMBLY <M3>

⚠ Symbol No.	Part No.	Part Name	Description	Local
900	YMA0029H	MECHA(A)ASSY		
900A	YMA0029D	MECHA(A)ASSY		
901	LY32870-001G	CASSETTEHOUSING ASSY		
902	YQ43893-8	MINI SCREW	(x3)	
903	LYH30420-001A	UPPER BASE ASSY		
904	QYSPSPU1425M	SCREW		
905	YDV2102B	DRUM ASSY		
906	LY42820-001A	DAMP.SCREW ASSY	(x2)	
907	LY42820-002A	DAMP.SCREW ASSY		
908	LY31538-001F	REEL DISK ASSY		
909	LY31538-002H	REEL DISK ASSY		
910	YQ44246	SLIT WASHER		
911	LY10372-001D	REEL COVER ASSY		
912	LY42120-002A	MINI SCREW		
913	LY41945-003A	MINI SCREW	(x2)	
914	YQ44246	SLIT WASHER		
915	LY43725-001D	TENSION ARM ASSY		
916	LYH40269-001A	SLANT POLE ARM ASSY		
917	LY43731-001F	TU ARM ASSY		
918	LY31531-001D	SWING ARM ASSY		
919	YQ43893	MINI SCREW		
920	LYH30424-001A	SLIDE DECK FINAL ASSY		
921	YQ43893	MINI SCREW	(x2)	
922	LY43023-001A	MINI SCREW		
924	LYH30419-001A	PAD ARM ASSY		
925	YQ44246	SLIT WASHER		
928	LYH40270-001A	TU BRAKE ASSY		
929	YQ44246	SLIT WASHER		
930	LY43684-001A	TENSION CONTROL LEVER ASSY		
931	LY32861-001A	CENTER GEAR		
932	LY31516-001F	PINCH ROLLER ARM FINAL ASSY		
933	YQ44246	SLIT WASHER		
934	LY43681-001A	TENSION CONTROL PLATE ASSY		
935	LY43687-001A	BRAKE CONTROL LEVER ASSY		

⚠ Symbol No.	Part No.	Part Name	Description	Local
936	LYH30421-001A	MOTOR BRACKET ASSY		
936A	QAR0138-001	LOADING MOTOR		
936B	LY41940-001A	TAPPING SCREW	(x2)	
937	YQ43893	MINI SCREW	(x3)	
938	LYH30422-001A	GUIDE RAIL ASSY		
939	YQ43893	MINI SCREW		
940	YQ44246	SLIT WASHER	(x2)	
941	LY32843-001A	SLIDE LEVER2 ASSY		
942	LY43690-001A	LOADING PLATE ASSY		
943	YQ44246	SLIT WASHER		
944	LY32858-001A	EJECT LEVER		
945	YQ44246	SLIT WASHER		
946	LYH40271-001A	BASE R ASSY		
947	YQ43893	MINI SCREW		
948	LY41945-001B	MINI SCREW		
949	LY43665-001A	MODE GEAR		
950	QSW0876-003	ROTARY ENCODER		
951	YQ43893	MINI SCREW	(x2)	
952	LY32860-001A	GEAR COVER ASSY		
953	YQ43893	MINI SCREW	(x2)	
954	YQ43893-4	MINI SCREW		
955	LY43676-001A	MAIN CAM ASSY		
956	LY41941-001B	SLIDE ARM ASSY		
957	LY43678-001A	CONNECT GEAR 2		
958	LY41954-001C	SUB CAM ASSY		
959	LY42120-001A	MINI SCREW		
960	LY43692-001A	CONTROL ARM ASSY		
961	LY32859-001A	REEL GEAR 1		
962	LY31508-002B	DRUM BASE ASSY		
963	QYSPSPU1425M	SCREW	1.4mm x 2.5mm(x3)	
964	QAR0142-001	CAPSTAN MOTOR		
965	YQ43893	MINI SCREW		
966	LY10367-001D	MAIN DECK ASSY		
976	YQ44246	SLIT WASHER		
977	YQ44246-6	SLIT WASHER		
978	LY42047-005A	WASHER		
979	LY43987-001B	SPACER		

ELECTRONIC VIEWFINDER ASSEMBLY<M4>

⚠ Symbol No.	Part No.	Part Name	Description	Local
300	LY21043-001E	VF ASSY		
301	LY32995-001B	EYE CUP		
302	LY43961-001B	SHEET(LENS)		
303	LY32472-001A	LENS ASSY		
304	LY43868-001A	SPRING(LENS)		
305	LY32993-001C	GUIDE LENS(VF)		
306	LY33006-001C	LEVER(LENS)		
307	LY33442-001B	LCD UNIT ASSY		
308	LY20931-001B	U.CASE(VF)R		
309	LY20930-001B	U.CASE(VF)F		
310	LY33083-001A	PROTECTOR(VF)	(x2)	
311	QAL0466-002	FPC		
312	NSW0200-001X	LEVER SWITCH VF SW		
313	LY30030-059B	SPACER(A)		
314	LY30018-031A	SPECIAL SCREW	(x2)	
315	LY32996-001B	COVER(VF)		
316	LY30018-022A	SPECIAL SCREW	(x6)	
317	LY20929-001C	B.CASE(VF)		
318	LY33076-001E	VF HINGE ASSY		
318A	LY43962-001C	TOR.SPRING		
318B	LY30019-048A	SPECIAL SCREW		
319	LY30018-084A	SPECIAL SCREW	(x7)	

MODEL	MARK	MODEL	MARK
GR-D70EK	A	GR-D70EY	C
GR-D70EX	B	GR-D70EZ	D

MONITOR ASSEMBLY (2.5 INCH) <M5>

⚠ Symbol No.	Part No.	Part Name	Description	Local
500	LY21042-005B	MONITOR ASSY		
501	LY20932-004E	M.COVER(2.5)ASSY		
501A	LY33007-001C	KNOB(LOCK)M		
501B	LY33008-001A	HOLDER(LOCK)M		
501C	LY30002-047A	COMPRES. SPRING		
501D	LY30018-0C8A	SPECIAL SCREW	(x2)	
501E	LY30030-0E5A	SPACER(A)		
502	LY10407-001C	MONI.CASE(2.5)		
503	QYSPSPT1730R	SCREW	1.7mm x 3mm(x2)	
504	LY30018-0K9A	SPECIAL SCREW	(x2)	
506	LY33011-001C	LCD FRAME(2.5)		
507	QLD0262-001	LCD MODULE		
508	LY30029-0R5A	SPACER(A)	(x3)	
510	LY33010-001A	SHIELD CASE(2.5)		
512	QYSPSPT1720R	SCREW	1.7mm x 2mm	
513	LY33012-001A	DIFF.SHEET(2.5)		
514	LY43938-001A	LIGHT SCREEN		
515	LY33013-003B	MONI.HINGE ASSY		
515A	LY33015-002A	HINGE COVER(U)		
515B	LY32969-002A	HINGE COVER(L)		
515C	LY30018-0K1A	SPECIAL SCREW	(x2)	
516	LY43936-001A	HOLDER(LAMP)	(x2)	
517	LY43396-001A	SHEET(REFLECT)		
518	QLL0142-001	LAMP		

MAIN BOARD ASSEMBLY <01>

⚠ Symbol No.	Part No.	Part Name	Description	Local
PW1	YB10404I-03	MAIN BOARD ASSY		
IC1001	MN103S33NJC	IC(MICRO C ROM)		
IC1001 or	MN103SF33NY4JC	IC(MICRO C ROM)		
IC1002	MB90097PFV149-X	IC(MICRO C ROM)		
IC1003	SN74AHC1G00K-X	IC		
IC1003 or	SN74AHC1G00DC-X	IC		
IC1004	S-89220ACNC-W	IC		
IC1005	X25330S8I-2.5-X	IC		
IC1005 or	AT25320N-10SI-X	IC		
IC1005 or	M95320-WMN6-X	IC		
IC1005 or	25LC320-I/SN-X	IC		
IC1005 or	CAT25C32SI-X	IC		
IC1006	RS5C314-X	IC		
IC1007	IC-PST3423U-X	IC		
IC1007 or	S-80823CNNB-X	IC		
IC2101	AK5355VT-X	IC		
IC2201	AK4564VQ	IC		
IC3001	JCY0152	IC		
IC3002	BU2501FV-X	IC		
IC3005	JCY0136-X	IC		
IC3701	BA7665FS-X	IC		
IC3731	MM1504XN-X	IC		
IC3801	JCP8045	IC		
IC4201	HD49340NP-X	IC		
IC4202	MM1613AN-X	IC		
IC4301	JCY0200	IC		
IC4302	R1160N151B-X	IC		
IC4802	BA10358FVM-W	IC		
IC4803	BA10358FVM-W	IC		
IC4804	UPC358G2/5/-W	IC		
IC4807	SN74AHC2G66U-X	IC		
IC4851	UPD16879GS-X	IC		
IC5501	JCY0185	IC		
IC6001	FA3698F	IC		
IC6801	R1224N102G-X	IC		
IC8001	TMS320DSC24GHKL	IC		
IC8002	K4S643232F-TC60	IC		
IC8002 or	HY57643220CT55	IC		
IC8002 or	HY57643220CT7	IC		
IC8003	MBV160TE90PTA48	IC(MICRO C ROM)		
IC8003 or	MBV160T90PTA48	IC(MICRO C ROM)		
IC8004	S-80842CNNB-W	IC		
IC8006	BU2288FV-X	IC		
IC8301	ISP1181ADGG-X	IC		
Q1001	DTA114EE-X	DIGI TRANSISTOR		
Q1001 or	PDTA114EE-X	DIGI TRANSISTOR		
Q1001 or	RN2102-X	DIGI TRANSISTOR		
Q1001 or	BCR183T-X	DIGI TRANSISTOR		
Q1002	UMC3N-W	DIGI TRANSISTOR		
Q1003	UMC3N-W	DIGI TRANSISTOR		
Q1004	UMC3N-W	DIGI TRANSISTOR		
Q1005	DTC143XE-X	DIGI TRANSISTOR		
Q1006	UMC3N-W	DIGI TRANSISTOR		
Q1007	2SC4617/QR/-X	TRANSISTOR		
Q1007 or	BC847BT-X	TRANSISTOR		
Q1008	DTC124EE-X	DIGI TRANSISTOR		
Q1008 or	PDTC124EE-X	DIGI TRANSISTOR		
Q1008 or	BCR141T-X	DIGI TRANSISTOR		
Q1009	2SJ347-X	MOS FET		
Q2001	UMX1N-W	PAIR TRANSISTOR		
Q2001 or	BC847S-X	PAIR TRANSISTOR		
Q2002	UMX1N-W	PAIR TRANSISTOR		
Q2002 or	BC847S-X	PAIR TRANSISTOR		
Q2003	UMX1N-W	PAIR TRANSISTOR		
Q2003 or	BC847S-X	PAIR TRANSISTOR		
Q2004	UMX1N-W	PAIR TRANSISTOR		
Q2004 or	BC847S-X	PAIR TRANSISTOR		
Q2005	UMX1N-W	PAIR TRANSISTOR		
Q2005 or	BC847S-X	PAIR TRANSISTOR		
Q2006	UMX1N-W	PAIR TRANSISTOR		
Q2006 or	BC847S-X	PAIR TRANSISTOR		
Q2202	UMX1N-W	PAIR TRANSISTOR		
Q2202 or	BC847S-X	PAIR TRANSISTOR		
Q2401	2SC4617/QR/-X	TRANSISTOR		

MODEL	MARK	MODEL	MARK
GR-D70EK	A	GR-D70EY	C
GR-D70EX	B	GR-D70EZ	D

⚠ Symbol No.	Part No.	Part Name	Description	Local
Q2401	or BC847BT-X	TRANSISTOR		
Q2403	2SC4617/QR/-X	TRANSISTOR		
Q2403	or BC847BT-X	TRANSISTOR		
Q3001	2SC4617/RS/-X	TRANSISTOR		
Q3001	or BC847BT-X	TRANSISTOR		
Q3002	2SC4617/RS/-X	TRANSISTOR		
Q3002	or BC847BT-X	TRANSISTOR		
Q3701	UMT1N-W	PAIR TRANSISTOR		
Q3701	or XP4401-W	TRANSISTOR		
Q3701	or BC856S-X	PAIR TRANSISTOR		
Q3702	UMZ1N-W	PAIR TRANSISTOR		
Q3702	or XP4601-W	TRANSISTOR		
Q3704	2SA1774/RS/-X	TRANSISTOR		
Q3704	or BC857BT-X	TRANSISTOR		
Q3705	UMT1N-W	PAIR TRANSISTOR		
Q3705	or XP4401-W	TRANSISTOR		
Q3705	or BC856S-X	PAIR TRANSISTOR		
Q3731	2SC4617/RS/-X	TRANSISTOR		
Q3731	or 2SD2216J/RS/-X	TRANSISTOR		
Q3731	or BC847BT-X	TRANSISTOR		
Q3732	DTC144EE-X	DIGI TRANSISTOR		
Q3732	or UN9213J-X	DIGI TRANSISTOR		
Q3732	or BCR148T-X	DIGI TRANSISTOR		
Q3733	UMZ1N-W	PAIR TRANSISTOR		
Q3733	or XP4601-W	TRANSISTOR		
Q3734	2SC4617/RS/-X	TRANSISTOR		
Q3734	or 2SD2216J/RS/-X	TRANSISTOR		
Q3734	or BC847BT-X	TRANSISTOR		
Q3735	UMZ1N-W	PAIR TRANSISTOR		
Q3735	or XP4601-W	TRANSISTOR		
Q4801	2SC4655/BC/-X	TRANSISTOR		
Q4802	2SC4617/RS/-X	TRANSISTOR		
Q4802	or BC847BT-X	TRANSISTOR		
Q4803	DTC144EE-X	DIGI TRANSISTOR		
Q4803	or BCR148T-X	DIGI TRANSISTOR		
Q4804	DTA144EE-X	DIGI TRANSISTOR		
Q4804	or BCR198T-X	DIGI TRANSISTOR		
Q4805	DTA143EE-X	DIGI TRANSISTOR		
Q4805	or BCR162T-X	DIGI TRANSISTOR		
Q4806	2SC4617/QR/-X	TRANSISTOR		
Q4806	or BC847BT-X	TRANSISTOR		
Q4851	2SC4617/RS/-X	TRANSISTOR		
Q4851	or BC847BT-X	TRANSISTOR		
Q6101	SSM5G01TU-X	MOS FET		
Q6102	2SA1577/QR/-X	TRANSISTOR		
Q6102	or BC807-25W-X	TRANSISTOR		
Q6201	SSM5G01TU-X	MOS FET		
Q6301	SSM5G01TU-X	MOS FET		
Q6302	2SA1577/QR/-X	TRANSISTOR		
Q6302	or BC807-25W-X	TRANSISTOR		
Q6303	2SC4617/QR/-X	TRANSISTOR		
Q6303	or BC847BT-X	TRANSISTOR		
Q6401	SSM5G01TU-X	MOS FET		
Q6501	SSM5G01TU-X	MOS FET		
Q6601	CPH3314-X	MOS FET		
Q6602	UMX1N-W	PAIR TRANSISTOR		
Q6602	or HN1C01FU/G/-X	PAIR TRANSISTOR		
Q6602	or BC847S-X	PAIR TRANSISTOR		
Q6603	2SA1577/QR/-X	TRANSISTOR		
Q6603	or BC807-25W-X	TRANSISTOR		
Q6604	DTC144EE-X	DIGI TRANSISTOR		
Q6604	or BCR148T-X	DIGI TRANSISTOR		
Q6605	UMT1N-W	PAIR TRANSISTOR		
Q6605	or HN1A01FU/G/-X	PAIR TRANSISTOR		
Q6605	or BC856S-X	PAIR TRANSISTOR		
Q6606	2SC4617/QR/-X	TRANSISTOR		
Q6606	or BC847BT-X	TRANSISTOR		
Q6701	CPH3314-X	MOS FET		
Q6801	FML9-W	TRANSISTOR		
Q8002	2SA1774/QR/-X	TRANSISTOR		
Q8002	or BC857BT-X	TRANSISTOR		
D1001	DA221-X	DIODE ARRAY		
D3001	EC2C01C-X	VARI CAP DIODE		
D3002	EC2C01C-X	VARI CAP DIODE		
D3003	EC2C01C-X	VARI CAP DIODE		
D3004	MA2Z720-X	SB DIODE		
D5501	1SS355-X	SI DIODE		

⚠ Symbol No.	Part No.	Part Name	Description	Local
D6601	RB481K-X	SB DIODE		
D6602	RB480Y-W	SB DIODE		
D6701	RB160M-30-X	SB DIODE		
D6702	RB160M-30-X	SB DIODE		
⚠ D6801	RB715F-X	SB DIODE		
D8001	RB751V-40-X	SB DIODE		
C1001	NDCA1HJ-8R0W	C CAPACITOR	8pF 50V J	
C1002	NDCA1HJ-100W	C CAPACITOR	10pF 50V J	
C1004	NCFA1AZ-104W	C CAPACITOR	0.1uF 10V Z	
C1005	NCFA1AZ-104W	C CAPACITOR	0.1uF 10V Z	
C1007	NCFA1AZ-104W	C CAPACITOR	0.1uF 10V Z	
C1008	NCFA1AZ-104W	C CAPACITOR	0.1uF 10V Z	
C1009	NCFA1AZ-104W	C CAPACITOR	0.1uF 10V Z	
C1010	NCFA1AZ-104W	C CAPACITOR	0.1uF 10V Z	
C1011	NCFA1AZ-104W	C CAPACITOR	0.1uF 10V Z	
C1012	NCFA1AZ-104W	C CAPACITOR	0.1uF 10V Z	
C1013	NCFA1AZ-104W	C CAPACITOR	0.1uF 10V Z	
C1014	NCFA1AZ-104W	C CAPACITOR	0.1uF 10V Z	
C1015	NCFA1AZ-104W	C CAPACITOR	0.1uF 10V Z	
C1019	NCFA1HZ-103W	C CAPACITOR	0.01uF 50V Z	
C1020	NCBA1EK-682W	C CAPACITOR	6800pF 25V K	
C1021	NCBA1EK-682W	C CAPACITOR	6800pF 25V K	
C1022	NCFA1HZ-103W	C CAPACITOR	0.01uF 50V Z	
C1024	NCFA1HZ-103W	C CAPACITOR	0.01uF 50V Z	
C1025	NCFA1HZ-103W	C CAPACITOR	0.01uF 50V Z	
C1029	NCFA1HZ-103W	C CAPACITOR	0.01uF 50V Z	
C1030	NBE20JM-106X	TA E CAPACITOR	10uF 6.3V M	
C1032	NCFA1HZ-103W	C CAPACITOR	0.01uF 50V Z	
C1035	NCFA1HZ-103W	C CAPACITOR	0.01uF 50V Z	
C1036	NCFA1AZ-104W	C CAPACITOR	0.1uF 10V Z	
C1037	NCFA1HZ-103W	C CAPACITOR	0.01uF 50V Z	
C1038	NCFA1HZ-103W	C CAPACITOR	0.01uF 50V Z	
C1039	NCFA1HZ-103W	C CAPACITOR	0.01uF 50V Z	
C1040	NDCA1HJ-100W	C CAPACITOR	10pF 50V J	
C1041	NCFA1AZ-104W	C CAPACITOR	0.1uF 10V Z	
C1042	NCFA1AZ-104W	C CAPACITOR	0.1uF 10V Z	
C1043	NCFA1AZ-104W	C CAPACITOR	0.1uF 10V Z	
C1044	NDCA1HJ-470W	C CAPACITOR	47pF 50V J	
C1045	NDCA1HJ-470W	C CAPACITOR	47pF 50V J	
C1046	NCF31AZ-105X	C CAPACITOR	1uF 10V Z	
C1047	NCFA1HZ-103W	C CAPACITOR	0.01uF 50V Z	
C1048	NCFA1HZ-103W	C CAPACITOR	0.01uF 50V Z	
C1049	NCFA1HZ-103W	C CAPACITOR	0.01uF 50V Z	
C1050	NCFA1HZ-103W	C CAPACITOR	0.01uF 50V Z	
C1051	NCB31CK-223X	C CAPACITOR	0.022uF 16V K	
C1052	NCB31CK-223X	C CAPACITOR	0.022uF 16V K	
C1053	NCB31CK-223X	C CAPACITOR	0.022uF 16V K	
C1054	NCB31CK-223X	C CAPACITOR	0.022uF 16V K	
C1055	NCFA1AZ-104W	C CAPACITOR	0.1uF 10V Z	
C1064	NBE20JM-226X	TA E CAPACITOR	22uF 6.3V M	
C2105	NCBA1HK-222W	C CAPACITOR	2200pF 50V K	
C2106	NCBA1HK-222W	C CAPACITOR	2200pF 50V K	
C2107	NBE20JM-106X	TA E CAPACITOR	10uF 6.3V M	
C2108	NCBA1AK-104W	C CAPACITOR	0.1uF 10V K	
C2109	NCBA1AK-104W	C CAPACITOR	0.1uF 10V K	
C2110	NBE20JM-475X	TA E CAPACITOR	4.7uF 6.3V M	
C2201	NCBA1AK-104W	C CAPACITOR	0.1uF 10V K	
C2202	NCB30JK-105X	C CAPACITOR	1uF 6.3V K	
C2203	NCB30JK-105X	C CAPACITOR	1uF 6.3V K	
C2204	NCB30JK-105X	C CAPACITOR	1uF 6.3V K	
C2205	NCB30JK-105X	C CAPACITOR	1uF 6.3V K	
C2209	NCB30JK-105X	C CAPACITOR	1uF 6.3V K	
C2210	NCB30JK-105X	C CAPACITOR	1uF 6.3V K	
C2211	NCBA1AK-104W	C CAPACITOR	0.1uF 10V K	
C2212	NCBA1AK-104W	C CAPACITOR	0.1uF 10V K	
C2213	NCBA1AK-104W	C CAPACITOR	0.1uF 10V K	
C2214	NCBA1AK-104W	C CAPACITOR	0.1uF 10V K	
C2215	NCBA1AK-104W	C CAPACITOR	0.1uF 10V K	
C2216	NCBA1AK-104W	C CAPACITOR	0.1uF 10V K	
C2217	NCBA1AK-104W	C CAPACITOR	0.1uF 10V K	
C2218	NCBA1AK-104W	C CAPACITOR	0.1uF 10V K	
C2223	NCBA1AK-104W	C CAPACITOR	0.1uF 10V K	
C2224	NCBA1AK-104W	C CAPACITOR	0.1uF 10V K	
C2401	NBE20JM-106X	TA E CAPACITOR	10uF 6.3V M	
C2402	NBE20JM-106X	TA E CAPACITOR	10uF 6.3V M	
C2403	NBE20JM-106X	TA E CAPACITOR	10uF 6.3V M	
C2404	NBE20JM-106X	TA E CAPACITOR	10uF 6.3V M	

MODEL	MARK	MODEL	MARK
GR-D70EK	A	GR-D70EY	C
GR-D70EX	B	GR-D70EZ	D

⚠ Symbol No.	Part No.	Part Name	Description	Local
C2405	NCBA1AK-104W	C CAPACITOR	0.1uF 10V K	
C2406	NBE20JM-106X	TA E CAPACITOR	10uF 6.3V M	
C2603	NCBA1CK-153W	C CAPACITOR	0.015uF 16V K	
C2604	NCBA1CK-153W	C CAPACITOR	0.015uF 16V K	
C2605	NCBA1EK-472W	C CAPACITOR	4700pF 25V K	
C2606	NCBA1EK-472W	C CAPACITOR	4700pF 25V K	
C2607	NCBA1HK-102W	C CAPACITOR	1000pF 50V K	
C2608	NCBA1HK-102W	C CAPACITOR	1000pF 50V K	
C2611	NCB30JK-105X	C CAPACITOR	1uF 6.3V K	
C2612	NCB30JK-105X	C CAPACITOR	1uF 6.3V K	
C2613	NCB30JK-105X	C CAPACITOR	1uF 6.3V K	
C2614	NDCA1HJ-101W	C CAPACITOR	100pF 50V J	
C2615	NDCA1HJ-101W	C CAPACITOR	100pF 50V J	
C3001	NBE20JM-106X	TA E CAPACITOR	10uF 6.3V M	
C3003	NCB30JK-105X	C CAPACITOR	1uF 6.3V K	
C3005	NBE20JM-106X	TA E CAPACITOR	10uF 6.3V M	
C3006	NCB30JK-105X	C CAPACITOR	1uF 6.3V K	
C3007	NCB10JK-106X	C CAPACITOR	10uF 6.3V K	
C3008	NBE20JM-106X	TA E CAPACITOR	10uF 6.3V M	
C3009	NCB30JK-105X	C CAPACITOR	1uF 6.3V K	
C3011	NCBA1AK-104W	C CAPACITOR	0.1uF 10V K	
C3012	NCBA1AK-104W	C CAPACITOR	0.1uF 10V K	
C3013	NCBA1CK-103W	C CAPACITOR	0.01uF 16V K	
C3015	NCBA1CK-103W	C CAPACITOR	0.01uF 16V K	
C3016	NCBA1AK-104W	C CAPACITOR	0.1uF 10V K	
C3017	NCBA1AK-104W	C CAPACITOR	0.1uF 10V K	
C3020	NCBA1AK-104W	C CAPACITOR	0.1uF 10V K	
C3021	NCBA1AK-104W	C CAPACITOR	0.1uF 10V K	
C3022	NCBA1AK-104W	C CAPACITOR	0.1uF 10V K	
C3023	NDCA1HJ-330W	C CAPACITOR	33pF 50V J	
C3024	NCBA1HK-102W	C CAPACITOR	1000pF 50V K	
C3025	NCBA1AK-104W	C CAPACITOR	0.1uF 10V K	
C3026	NCB30JK-105X	C CAPACITOR	1uF 6.3V K	
C3027	NCBA1EK-472W	C CAPACITOR	4700pF 25V K	
C3028	NDCA1EJ-271W	C CAPACITOR	270pF 25V J	
C3029	NCBA1CK-103W	C CAPACITOR	0.01uF 16V K	
C3030	NCBA1AK-104W	C CAPACITOR	0.1uF 10V K	
C3031	NCBA1AK-104W	C CAPACITOR	0.1uF 10V K	
C3032	NCBA1HK-102W	C CAPACITOR	1000pF 50V K	
C3033	NDCA1HJ-220W	C CAPACITOR	22pF 50V J	
C3036	NDCA1HJ-8R0W	C CAPACITOR	8pF 50V J	
C3037	NDCA1HJ-8R0W	C CAPACITOR	8pF 50V J	
C3038	NCBA1AK-104W	C CAPACITOR	0.1uF 10V K	
C3039	NCBA1AK-104W	C CAPACITOR	0.1uF 10V K	
C3042	NCBA1CK-103W	C CAPACITOR	0.01uF 16V K	
C3043	NCBA1CK-103W	C CAPACITOR	0.01uF 16V K	
C3044	NCBA1AK-104W	C CAPACITOR	0.1uF 10V K	
C3045	NCBA1AK-104W	C CAPACITOR	0.1uF 10V K	
C3046	NCBA1CK-103W	C CAPACITOR	0.01uF 16V K	
C3047	NCBA1AK-104W	C CAPACITOR	0.1uF 10V K	
C3048	NCB31CK-473X	C CAPACITOR	0.047uF 16V K	
C3049	NCBA1HK-222W	C CAPACITOR	2200pF 50V K	
C3050	NCBA1CK-103W	C CAPACITOR	0.01uF 16V K	
C3055	NCBA1CK-103W	C CAPACITOR	0.01uF 16V K	
C3059	NBE20GM-226X	TA E CAPACITOR	22uF 4V M	
C3060	NCBA1CK-103W	C CAPACITOR	0.01uF 16V K	
C3064	NCBA1HK-102W	C CAPACITOR	1000pF 50V K	
C3066	NCB30JK-105X	C CAPACITOR	1uF 6.3V K	
C3067	NCBA1HK-102W	C CAPACITOR	1000pF 50V K	
C3069	NCBA1AK-104W	C CAPACITOR	0.1uF 10V K	
C3701	NBE20JM-106X	TA E CAPACITOR	10uF 6.3V M	
C3702	NDCA1HJ-560W	C CAPACITOR	56pF 50V J	
C3703	NDCA1HJ-270W	C CAPACITOR	27pF 50V J	
C3704	NDCA1HJ-680W	C CAPACITOR	68pF 50V J	
C3705	NDCA1HJ-270W	C CAPACITOR	27pF 50V J	
C3706	NCB30JK-105X	C CAPACITOR	1uF 6.3V K	
C3707	NCBA1CK-103W	C CAPACITOR	0.01uF 16V K	
C3708	NCBA1AK-104W	C CAPACITOR	0.1uF 10V K	
C3709	NCBA1CK-103W	C CAPACITOR	0.01uF 16V K	
C3712	NEA70GM-337X	E CAPACITOR	330uF 4V M	
C3713	NEA70GM-337X	E CAPACITOR	330uF 4V M	
C3715	NCBA1CK-103W	C CAPACITOR	0.01uF 16V K	
C3731	NCBA1CK-103W	C CAPACITOR	0.01uF 16V K	
C3732	NCBA1HK-102W	C CAPACITOR	1000pF 50V K	
C3733	NDCA1HJ-3R0W	C CAPACITOR	3pF 50V J	
C3734	NDCA1HJ-5R0W	C CAPACITOR	5pF 50V J	
C3735	NDCA1HJ-330W	C CAPACITOR	33pF 50V J	
C3736	NCBA1HK-102W	C CAPACITOR	1000pF 50V K	
C3738	NCBA1CK-103W	C CAPACITOR	0.01uF 16V K	
C3739	NCBA1CK-103W	C CAPACITOR	0.01uF 16V K	
C3740	NCB30JK-105X	C CAPACITOR	1uF 6.3V K	
C3741	NCB30JK-105X	C CAPACITOR	1uF 6.3V K	
C3742	NCBA1AK-104W	C CAPACITOR	0.1uF 10V K	
C3743	NDCA1HJ-3R0W	C CAPACITOR	3pF 50V J	
C3744	NDCA1HJ-5R0W	C CAPACITOR	5pF 50V J	
C3745	NDCA1HJ-330W	C CAPACITOR	33pF 50V J	
C3746	NCB20JM-475X	C CAPACITOR	4.7uF 6.3V M	
C3747	NCBA1CK-103W	C CAPACITOR	0.01uF 16V K	
C3801	NCB21AK-105X	C CAPACITOR	1uF 10V K	
C3802	NCB21AK-105X	C CAPACITOR	1uF 10V K	
C3803	NBE20GM-476X	TA E CAPACITOR	47uF 4V M	
C3804	NBE20GM-476X	TA E CAPACITOR	47uF 4V M	
C3805	NCBA1CK-103W	C CAPACITOR	0.01uF 16V K	
C3806	NCBA1CK-103W	C CAPACITOR	0.01uF 16V K	
C3807	NCBA1CK-103W	C CAPACITOR	0.01uF 16V K	
C3808	NCBA1CK-103W	C CAPACITOR	0.01uF 16V K	
C3809	NCB31CK-104X	C CAPACITOR	0.1uF 16V K	
C3810	NCBA1CK-103W	C CAPACITOR	0.01uF 16V K	
C3811	NCB31CK-104X	C CAPACITOR	0.1uF 16V K	
C3812	NCBA1AK-104W	C CAPACITOR	0.1uF 10V K	
C3813	NCBA1AK-104W	C CAPACITOR	0.1uF 10V K	
C3814	NCBA1CK-103W	C CAPACITOR	0.01uF 16V K	
C3815	NCBA1AK-104W	C CAPACITOR	0.1uF 10V K	
C3816	NCBA1AK-104W	C CAPACITOR	0.1uF 10V K	
C3817	NCBA1AK-104W	C CAPACITOR	0.1uF 10V K	
C3818	NCBA1AK-104W	C CAPACITOR	0.1uF 10V K	
C3819	NCBA1CK-103W	C CAPACITOR	0.01uF 16V K	
C4201	NBE20JM-106X	TA E CAPACITOR	10uF 6.3V M	
C4202	NCBA1AK-104W	C CAPACITOR	0.1uF 10V K	
C4203	NCB21AK-105X	C CAPACITOR	1uF 10V K	
C4204	NCBA1AK-104W	C CAPACITOR	0.1uF 10V K	
C4205	NCBA1AK-104W	C CAPACITOR	0.1uF 10V K	
C4206	NCB21CK-105X	C CAPACITOR	1uF 16V K	
C4207	NCBA1AK-104W	C CAPACITOR	0.1uF 10V K	
C4208	NCB30JK-105X	C CAPACITOR	1uF 6.3V K	
C4209	NCBA1AK-104W	C CAPACITOR	0.1uF 10V K	
C4210	NCBA1AK-104W	C CAPACITOR	0.1uF 10V K	
C4211	NCBA1AK-104W	C CAPACITOR	0.1uF 10V K	
C4212	NCBA1AK-104W	C CAPACITOR	0.1uF 10V K	
C4213	NCBA1AK-104W	C CAPACITOR	0.1uF 10V K	
C4214	NCBA1AK-104W	C CAPACITOR	0.1uF 10V K	
C4216	NCBA1AK-104W	C CAPACITOR	0.1uF 10V K	
C4301	NCBA1AK-104W	C CAPACITOR	0.1uF 10V K	
C4302	NCBA1AK-104W	C CAPACITOR	0.1uF 10V K	
C4303	NCBA1AK-104W	C CAPACITOR	0.1uF 10V K	
C4304	NCBA1AK-104W	C CAPACITOR	0.1uF 10V K	
C4305	NCBA1AK-104W	C CAPACITOR	0.1uF 10V K	
C4306	NCBA1AK-104W	C CAPACITOR	0.1uF 10V K	
C4307	NCBA1AK-104W	C CAPACITOR	0.1uF 10V K	
C4308	NCBA1AK-104W	C CAPACITOR	0.1uF 10V K	
C4309	NCBA1AK-104W	C CAPACITOR	0.1uF 10V K	
C4310	NCBA1AK-104W	C CAPACITOR	0.1uF 10V K	
C4311	NCBA1AK-104W	C CAPACITOR	0.1uF 10V K	
C4312	NCBA1AK-104W	C CAPACITOR	0.1uF 10V K	
C4313	NBE20JM-106X	TA E CAPACITOR	10uF 6.3V M	
C4314	NCBA1AK-104W	C CAPACITOR	0.1uF 10V K	
C4315	NCBA1AK-104W	C CAPACITOR	0.1uF 10V K	
C4316	NCBA1CK-103W	C CAPACITOR	0.01uF 16V K	
C4317	NCBA1AK-104W	C CAPACITOR	0.1uF 10V K	
C4803	NBE20JM-106X	TA E CAPACITOR	10uF 6.3V M	
C4804	NCFA1AZ-104W	C CAPACITOR	0.1uF 10V Z	
C4806	NCFA1AZ-104W	C CAPACITOR	0.1uF 10V Z	
C4808	NCB30JK-105X	C CAPACITOR	1uF 6.3V K	
C4809	NCFA1AZ-104W	C CAPACITOR	0.1uF 10V Z	
C4810	NCBA1CK-103W	C CAPACITOR	0.01uF 16V K	
C4811	NCBA1CK-103W	C CAPACITOR	0.01uF 16V K	
C4812	NCFA1AZ-104W	C CAPACITOR	0.1uF 10V Z	
C4813	NCFA1AZ-104W	C CAPACITOR	0.1uF 10V Z	
C4814	NCFA1AZ-104W	C CAPACITOR	0.1uF 10V Z	
C4815	NCB31HK-152X	C CAPACITOR	1500pF 50V K	
C4819	NCB31CK-104X	C CAPACITOR	0.1uF 16V K	
C4851	NBE20JM-106X	TA E CAPACITOR	10uF 6.3V M	
C4852	NCFA1AZ-104W	C CAPACITOR	0.1uF 10V Z	
C4853	NBE21AM-335X	TA E CAPACITOR	3.3uF 10V M	
C4854	NBE21AM-106X	TA E CAPACITOR	10uF 10V M	
C4855	NCB31CK-104X	C CAPACITOR	0.1uF 16V K	

MODEL	MARK	MODEL	MARK
GR-D70EK	A	GR-D70EY	C
GR-D70EX	B	GR-D70EZ	D

⚠ Symbol No.	Part No.	Part Name	Description	Local
C4858	NDCA1HJ-330W	C CAPACITOR	33pF 50V J	
C4859	NCBA1CK-223W	C CAPACITOR	0.022uF 16V K	
C4860	NCBA1CK-223W	C CAPACITOR	0.022uF 16V K	
C4861	NCBA1CK-103W	C CAPACITOR	0.01uF 16V K	
C4862	NCBA1CK-103W	C CAPACITOR	0.01uF 16V K	
C4864	NBE20JM-106X	TA E CAPACITOR	10uF 6.3V M	
C4865	NCBA1AK-104W	C CAPACITOR	0.1uF 10V K	
C5501	NCBA1AK-104W	C CAPACITOR	0.1uF 10V K	
C5503	NCBA1AK-104W	C CAPACITOR	0.1uF 10V K	
C5504	NCBA1AK-104W	C CAPACITOR	0.1uF 10V K	
C5506	NBE40GM-476X	TA E CAPACITOR	47uF 4V M	
C5507	NCBA1AK-104W	C CAPACITOR	0.1uF 10V K	
C5508	NCBA1AK-104W	C CAPACITOR	0.1uF 10V K	
C5509	NCBA1AK-104W	C CAPACITOR	0.1uF 10V K	
C5510	NBP21VM-105X	TA E CAPACITOR	1uF 35V M	
C5511	NBZ0003-475X	TA E CAPACITOR	4.7uF 20V M	
C5512	NBE21AM-106X	TA E CAPACITOR	10uF 10V M	
C5513	NCB31CK-104X	C CAPACITOR	0.1uF 16V K	
C5514	NCBA1AK-104W	C CAPACITOR	0.1uF 10V K	
C5515	NCBA1AK-104W	C CAPACITOR	0.1uF 10V K	
C5516	NCBA1AK-104W	C CAPACITOR	0.1uF 10V K	
C5517	NCB31CK-104X	C CAPACITOR	0.1uF 16V K	
C5518	NCBA1AK-104W	C CAPACITOR	0.1uF 10V K	
C5519	NCBA1AK-104W	C CAPACITOR	0.1uF 10V K	
C6002	NCB21CK-105X	C CAPACITOR	1uF 16V K	
C6003	NEA71CM-106X	E CAPACITOR	10uF 16V M	
C6004	NCB21CK-105X	C CAPACITOR	1uF 16V K	
C6021	NCB21CK-104X	C CAPACITOR	0.1uF 16V K	
C6022	NCB21CK-104X	C CAPACITOR	0.1uF 16V K	
C6023	NCB21CK-105X	C CAPACITOR	1uF 16V K	
C6024	NCB21CK-105X	C CAPACITOR	1uF 16V K	
C6025	NCB21CK-105X	C CAPACITOR	1uF 16V K	
C6026	NCB21CK-105X	C CAPACITOR	1uF 16V K	
C6027	NCBA1EK-472W	C CAPACITOR	4700pF 25V K	
C6029	NCBA1HK-102W	C CAPACITOR	1000pF 50V K	
C6030	NCBA1HK-102W	C CAPACITOR	1000pF 50V K	
C6031	NCBA1HK-102W	C CAPACITOR	1000pF 50V K	
C6032	NCBA1HK-102W	C CAPACITOR	1000pF 50V K	
C6033	NCBA1CK-103W	C CAPACITOR	0.01uF 16V K	
C6034	NCB31CK-104X	C CAPACITOR	0.1uF 16V K	
C6035	NCB31CK-104X	C CAPACITOR	0.1uF 16V K	
C6036	NDCA1HJ-101W	C CAPACITOR	100pF 50V J	
C6037	NCB21CK-473X	C CAPACITOR	0.047uF 16V K	
C6038	NCBA1CK-103W	C CAPACITOR	0.01uF 16V K	
C6039	NCB31CK-104X	C CAPACITOR	0.1uF 16V K	
C6040	NCB31CK-473X	C CAPACITOR	0.047uF 16V K	
C6041	NCB31EK-103X	C CAPACITOR	0.01uF 25V K	
C6042	NCB31EK-103X	C CAPACITOR	0.01uF 25V K	
C6043	NCB31CK-223X	C CAPACITOR	0.022uF 16V K	
C6044	NCBA1CK-103W	C CAPACITOR	0.01uF 16V K	
C6045	NCB21CK-105X	C CAPACITOR	1uF 16V K	
C6101	NCB21CK-105X	C CAPACITOR	1uF 16V K	
C6103	NCB10JK-106X	C CAPACITOR	10uF 6.3V K	
C6104	NCBA1HK-102W	C CAPACITOR	1000pF 50V K	
C6105	NCBA1HK-561W	C CAPACITOR	560pF 50V K	
C6106	NCB21CK-105X	C CAPACITOR	1uF 16V K	
C6201	NCB21CK-105X	C CAPACITOR	1uF 16V K	
C6203	NCB10JK-106X	C CAPACITOR	10uF 6.3V K	
C6204	NCBA1EK-472W	C CAPACITOR	4700pF 25V K	
C6301	NCB21CK-105X	C CAPACITOR	1uF 16V K	
C6303	NCB10JK-106X	C CAPACITOR	10uF 6.3V K	
C6304	NCBA1HK-102W	C CAPACITOR	1000pF 50V K	
C6401	NCB21CK-105X	C CAPACITOR	1uF 16V K	
C6403	NCB21CK-105X	C CAPACITOR	1uF 16V K	
C6405	NCB31CK-683X	C CAPACITOR	0.068uF 16V K	
C6501	NCB21CK-105X	C CAPACITOR	1uF 16V K	
C6503	NCB21CK-105X	C CAPACITOR	1uF 16V K	
C6505	NCB21CK-105X	C CAPACITOR	1uF 16V K	
C6601	NCB21CK-105X	C CAPACITOR	1uF 16V K	
C6602	NCB21CK-105X	C CAPACITOR	1uF 16V K	
C6603	NCB11EK-105X	C CAPACITOR	1uF 25V K	
C6605	NCB21CK-105X	C CAPACITOR	1uF 16V K	
C6606	NCB21CK-105X	C CAPACITOR	1uF 16V K	
C6607	NCB11EK-105X	C CAPACITOR	1uF 25V K	
C6608	NCB31CK-104X	C CAPACITOR	0.1uF 16V K	
C6609	NCB21CK-105X	C CAPACITOR	1uF 16V K	
C6701	NCB21CK-105X	C CAPACITOR	1uF 16V K	
C6703	NCB21CK-105X	C CAPACITOR	1uF 16V K	

⚠ Symbol No.	Part No.	Part Name	Description	Local
C6801	NCB21CK-105X	C CAPACITOR	1uF 16V K	
C6802	NBE40JM-476X	TA E CAPACITOR	47uF 6.3V M	
C6804	NCB21CK-105X	C CAPACITOR	1uF 16V K	
C6807	NCB10JK-106X	C CAPACITOR	10uF 6.3V K	
C6809	NDCA1HJ-151W	C CAPACITOR	150pF 50V J	
C8001	NBE20JM-106X	TA E CAPACITOR	10uF 6.3V M	
C8002	NBE20JM-106X	TA E CAPACITOR	10uF 6.3V M	
C8003	NBE20JM-106X	TA E CAPACITOR	10uF 6.3V M	
C8004	NCBA1AK-104W	C CAPACITOR	0.1uF 10V K	
C8005	NCBA1AK-104W	C CAPACITOR	0.1uF 10V K	
C8006	NBE20JM-476X	TA E CAPACITOR	47uF 6.3V M	
C8007	NCBA1AK-104W	C CAPACITOR	0.1uF 10V K	
C8008	NCBA1AK-104W	C CAPACITOR	0.1uF 10V K	
C8010	NCBA1AK-104W	C CAPACITOR	0.1uF 10V K	
C8011	NCBA1AK-104W	C CAPACITOR	0.1uF 10V K	
C8014	NCBA1AK-104W	C CAPACITOR	0.1uF 10V K	
C8015	NCBA1AK-104W	C CAPACITOR	0.1uF 10V K	
C8016	NCBA1AK-104W	C CAPACITOR	0.1uF 10V K	
C8017	NCBA1AK-104W	C CAPACITOR	0.1uF 10V K	
C8018	NCBA1AK-104W	C CAPACITOR	0.1uF 10V K	
C8019	NCBA1AK-104W	C CAPACITOR	0.1uF 10V K	
C8020	NCBA1AK-104W	C CAPACITOR	0.1uF 10V K	
C8021	NBE20JM-106X	TA E CAPACITOR	10uF 6.3V M	
C8022	NCBA1AK-104W	C CAPACITOR	0.1uF 10V K	
C8023	NCBA1AK-104W	C CAPACITOR	0.1uF 10V K	
C8024	NCBA1AK-104W	C CAPACITOR	0.1uF 10V K	
C8025	NCBA1AK-104W	C CAPACITOR	0.1uF 10V K	
C8026	NCBA1AK-104W	C CAPACITOR	0.1uF 10V K	
C8030	NCBA1CK-103W	C CAPACITOR	0.01uF 16V K	
C8301	NBE20JM-106X	TA E CAPACITOR	10uF 6.3V M	
C8305	NCBA1AK-104W	C CAPACITOR	0.1uF 10V K	
C8306	NCBA1AK-104W	C CAPACITOR	0.1uF 10V K	
C8307	NCBA1AK-104W	C CAPACITOR	0.1uF 10V K	
C8310	NCBA1AK-104W	C CAPACITOR	0.1uF 10V K	
C8311	NCBA1AK-104W	C CAPACITOR	0.1uF 10V K	
R1001	NRSA6AJ-105W	MG RESISTOR	1MΩ 1/16W J	
R1002	NRSA6AJ-104W	MG RESISTOR	100kΩ 1/16W J	
R1003	NRSA6AJ-104W	MG RESISTOR	100kΩ 1/16W J	
R1006	NRSA6AJ-102W	MG RESISTOR	1kΩ 1/16W J	
R1007	NRSA6AJ-0R0W	MG RESISTOR	0Ω 1/16W J	
R1008	NRSA6AJ-103W	MG RESISTOR	10kΩ 1/16W J	
R1009	NRSA6AJ-103W	MG RESISTOR	10kΩ 1/16W J	
R1010	NRSA6AJ-0R0W	MG RESISTOR	0Ω 1/16W J	
R1011	NRSA6AJ-104W	MG RESISTOR	100kΩ 1/16W J	
R1012	NRSA6AJ-102W	MG RESISTOR	1kΩ 1/16W J	
R1013	NRSA6AJ-102W	MG RESISTOR	1kΩ 1/16W J	
R1014	NRSA6AJ-102W	MG RESISTOR	1kΩ 1/16W J	
R1015	NRSA6AJ-102W	MG RESISTOR	1kΩ 1/16W J	
R1016	NRSA6AJ-103W	MG RESISTOR	10kΩ 1/16W J	
R1017	NRSA6AJ-474W	MG RESISTOR	470kΩ 1/16W J	
R1018	NRSA6AJ-474W	MG RESISTOR	470kΩ 1/16W J	
R1019	NRSA6AJ-102W	MG RESISTOR	1kΩ 1/16W J	
R1020	NRSA6AJ-104W	MG RESISTOR	100kΩ 1/16W J	
R1021	NRSA6AJ-104W	MG RESISTOR	100kΩ 1/16W J	
R1022	NRSA6AJ-102W	MG RESISTOR	1kΩ 1/16W J	
R1023	NRSA6AJ-102W	MG RESISTOR	1kΩ 1/16W J	
R1024	NRSA6AJ-104W	MG RESISTOR	100kΩ 1/16W J	
R1025	NRSA6AJ-104W	MG RESISTOR	100kΩ 1/16W J	
R1027	NRSA6AJ-0R0W	MG RESISTOR	0Ω 1/16W J	
R1030	NRSA6AJ-753W	MG RESISTOR	75kΩ 1/16W J	
R1031	NRSA6AJ-334W	MG RESISTOR	330kΩ 1/16W J	
R1032	NRSA6AJ-332W	MG RESISTOR	3.3kΩ 1/16W J	
R1033	NRSA6AJ-332W	MG RESISTOR	3.3kΩ 1/16W J	
R1034	NRSA6AJ-332W	MG RESISTOR	3.3kΩ 1/16W J	
R1035	NRSA6AJ-102W	MG RESISTOR	1kΩ 1/16W J	
R1037	NRSA6AJ-561W	MG RESISTOR	560Ω 1/16W J	
R1038	NRSA6AJ-104W	MG RESISTOR	100kΩ 1/16W J	
R1039	NRSA6AJ-152W	MG RESISTOR	1.5kΩ 1/16W J	
R1040	NRSA6AJ-104W	MG RESISTOR	100kΩ 1/16W J	
R1041	NRSA6AJ-0R0W	MG RESISTOR	0Ω 1/16W J	
R1042	NRSA6AJ-0R0W	MG RESISTOR	0Ω 1/16W J	
R1043	NRSA6AJ-102W	MG RESISTOR	1kΩ 1/16W J	
R1044	NRSA6AJ-104W	MG RESISTOR	100kΩ 1/16W J	
R1045	NRSA6AJ-105W	MG RESISTOR	1MΩ 1/16W J	
R1046	NRSA6AJ-104W	MG RESISTOR	100kΩ 1/16W J	
R1047	NRSA6AJ-104W	MG RESISTOR	100kΩ 1/16W J	
R1048	NRSA6AJ-103W	MG RESISTOR	10kΩ 1/16W J	

MODEL	MARK	MODEL	MARK
GR-D70EK	A	GR-D70EY	C
GR-D70EX	B	GR-D70EZ	D

⚠ Symbol No.	Part No.	Part Name	Description	Local
R1049	NRSA6AJ-623W	MG RESISTOR	62kΩ 1/16W J	
R1050	NRSA6AJ-823W	MG RESISTOR	82kΩ 1/16W J	
R1051	NRSA6AJ-473W	MG RESISTOR	47kΩ 1/16W J	
R1052	NRSA6AJ-104W	MG RESISTOR	100kΩ 1/16W J	
R1053	NRSA6AJ-222W	MG RESISTOR	2.2kΩ 1/16W J	
R1054	NRSA6AJ-104W	MG RESISTOR	100kΩ 1/16W J	
R1055	NRSA6AJ-334W	MG RESISTOR	330kΩ 1/16W J	
R1056	NRSA6AJ-334W	MG RESISTOR	330kΩ 1/16W J	
R1057	NRSA6AJ-102W	MG RESISTOR	1kΩ 1/16W J	
R1058	NRSA6AJ-102W	MG RESISTOR	1kΩ 1/16W J	
R1059	NRSA6AJ-102W	MG RESISTOR	1kΩ 1/16W J	
R1060	NRSA6AJ-103W	MG RESISTOR	10kΩ 1/16W J	
R1061	NRSA6AJ-561W	MG RESISTOR	560Ω 1/16W J	
R1062	NRSA6AJ-224W	MG RESISTOR	220kΩ 1/16W J	
R1063	NRSA6AJ-472W	MG RESISTOR	4.7kΩ 1/16W J	
R1064	NRSA6AJ-103W	MG RESISTOR	10kΩ 1/16W J	
R1065	NRSA6AJ-153W	MG RESISTOR	15kΩ 1/16W J	
R1066	NRSA6AJ-103W	MG RESISTOR	10kΩ 1/16W J	
R1067	NRSA6AJ-334W	MG RESISTOR	330kΩ 1/16W J	
R1068	NRSA6AJ-102W	MG RESISTOR	1kΩ 1/16W J	
R1069	NRSA6AJ-104W	MG RESISTOR	100kΩ 1/16W J	
R1070	NRSA6AJ-154W	MG RESISTOR	150kΩ 1/16W J	
R1071	NRSA6AJ-272W	MG RESISTOR	2.7kΩ 1/16W J	
R1072	NRSA6AJ-183W	MG RESISTOR	18kΩ 1/16W J	
R1073	NRSA6AJ-103W	MG RESISTOR	10kΩ 1/16W J	
R1074	NRSA6AJ-472W	MG RESISTOR	4.7kΩ 1/16W J	
R1075	NRSA6AJ-473W	MG RESISTOR	47kΩ 1/16W J	
R1076	NRSA6AJ-473W	MG RESISTOR	47kΩ 1/16W J	
R1077	NRSA6AJ-104W	MG RESISTOR	100kΩ 1/16W J	
R1078	NRSA6AJ-393W	MG RESISTOR	39kΩ 1/16W J	
R1079	NRSA6AJ-223W	MG RESISTOR	22kΩ 1/16W J	
R1080	NRSA6AJ-822W	MG RESISTOR	8.2kΩ 1/16W J	
R1081	NRSA6AJ-103W	MG RESISTOR	10kΩ 1/16W J	
R1082	NRSA6AJ-123W	MG RESISTOR	12kΩ 1/16W J	
R1083	NRSA6AJ-102W	MG RESISTOR	1kΩ 1/16W J	
R1084	NRSA6AJ-102W	MG RESISTOR	1kΩ 1/16W J	
R1085	NRSA6AJ-102W	MG RESISTOR	1kΩ 1/16W J	
R1086	NRSA6AJ-332W	MG RESISTOR	3.3kΩ 1/16W J	
R1087	NRSA6AJ-332W	MG RESISTOR	3.3kΩ 1/16W J	
R1088	NRSA6AJ-332W	MG RESISTOR	3.3kΩ 1/16W J	
R1089	NRSA6AJ-332W	MG RESISTOR	3.3kΩ 1/16W J	
R1091	NRSA6AJ-103W	MG RESISTOR	10kΩ 1/16W J	
R1092	NRSA6AJ-103W	MG RESISTOR	10kΩ 1/16W J	
R1093	NRSA6AJ-103W	MG RESISTOR	10kΩ 1/16W J	
R1094	NRSA6AJ-103W	MG RESISTOR	10kΩ 1/16W J	
R1095	NRSA6AJ-102W	MG RESISTOR	1kΩ 1/16W J	
R1096	NRSA6AJ-104W	MG RESISTOR	100kΩ 1/16W J	
R1097	NRSA6AJ-104W	MG RESISTOR	100kΩ 1/16W J	
R1099	NRSA6AJ-104W	MG RESISTOR	100kΩ 1/16W J	
R2001	NRSA6AJ-474W	MG RESISTOR	470kΩ 1/16W J	
R2002	NRSA6AJ-474W	MG RESISTOR	470kΩ 1/16W J	
R2003	NRSA6AJ-474W	MG RESISTOR	470kΩ 1/16W J	
R2004	NRSA6AJ-474W	MG RESISTOR	470kΩ 1/16W J	
R2005	NRSA6AJ-474W	MG RESISTOR	470kΩ 1/16W J	
R2006	NRSA6AJ-474W	MG RESISTOR	470kΩ 1/16W J	
R2007	NRSA6AJ-474W	MG RESISTOR	470kΩ 1/16W J	
R2008	NRSA6AJ-474W	MG RESISTOR	470kΩ 1/16W J	
R2009	NRSA6AJ-474W	MG RESISTOR	470kΩ 1/16W J	
R2010	NRSA6AJ-474W	MG RESISTOR	470kΩ 1/16W J	
R2011	NRSA6AJ-474W	MG RESISTOR	470kΩ 1/16W J	
R2012	NRSA6AJ-474W	MG RESISTOR	470kΩ 1/16W J	
R2101	NRSA6AJ-471W	MG RESISTOR	470Ω 1/16W J	
R2102	NRSA6AJ-471W	MG RESISTOR	470Ω 1/16W J	
R2105	NRSA6AJ-0R0W	MG RESISTOR	0Ω 1/16W J	
R2111	NRSA6AJ-0R0W	MG RESISTOR	0Ω 1/16W J	
R2112	NRSA6AJ-0R0W	MG RESISTOR	0Ω 1/16W J	
R2113	NRSA6AJ-0R0W	MG RESISTOR	0Ω 1/16W J	
R2114	NRSA6AJ-0R0W	MG RESISTOR	0Ω 1/16W J	
R2201	NRSA6AJ-684W	MG RESISTOR	680kΩ 1/16W J	
R2202	NRSA6AJ-564W	MG RESISTOR	560kΩ 1/16W J	
R2203	NRSA6AJ-393W	MG RESISTOR	39kΩ 1/16W J	
R2204	NRSA6AJ-154W	MG RESISTOR	150kΩ 1/16W J	
R2206	NRSA6AJ-333W	MG RESISTOR	33kΩ 1/16W J	
R2207	NRSA6AJ-333W	MG RESISTOR	33kΩ 1/16W J	
R2208	NRSA6AJ-223W	MG RESISTOR	22kΩ 1/16W J	
R2209	NRSA6AJ-223W	MG RESISTOR	22kΩ 1/16W J	
R2210	NRSA6AJ-0R0W	MG RESISTOR	0Ω 1/16W J	
R2211	NRSA6AJ-0R0W	MG RESISTOR	0Ω 1/16W J	

⚠ Symbol No.	Part No.	Part Name	Description	Local
R2212	NRSA6AJ-2R7W	MG RESISTOR	2.7Ω 1/16W J	
R2213	NRSA6AJ-2R7W	MG RESISTOR	2.7Ω 1/16W J	
R2217	NRSA6AJ-100W	MG RESISTOR	10Ω 1/16W J	
R2218	NRSA6AJ-100W	MG RESISTOR	10Ω 1/16W J	
R2219	NRSA6AJ-0R0W	MG RESISTOR	0Ω 1/16W J	
R2220	NRSA6AJ-0R0W	MG RESISTOR	0Ω 1/16W J	
R2221	NRSA6AJ-0R0W	MG RESISTOR	0Ω 1/16W J	
R2222	NRSA6AJ-100W	MG RESISTOR	10Ω 1/16W J	
R2223	NRSA6AJ-100W	MG RESISTOR	10Ω 1/16W J	
R2224	NRSA6AJ-100W	MG RESISTOR	10Ω 1/16W J	
R2225	NRSA6AJ-0R0W	MG RESISTOR	0Ω 1/16W J	
R2226	NRSA6AJ-0R0W	MG RESISTOR	0Ω 1/16W J	
R2229	NRSA6AJ-564W	MG RESISTOR	560kΩ 1/16W J	
R2230	NRSA6AJ-564W	MG RESISTOR	560kΩ 1/16W J	
R2231	NRSA6AJ-332W	MG RESISTOR	3.3kΩ 1/16W J	
R2401	NRSA6AJ-472W	MG RESISTOR	4.7kΩ 1/16W J	
R2402	NRSA6AJ-472W	MG RESISTOR	4.7kΩ 1/16W J	
R2403	NRSA6AJ-183W	MG RESISTOR	18kΩ 1/16W J	
R2406	NRSA6AJ-0R0W	MG RESISTOR	0Ω 1/16W J	
R2407	NRSA6AJ-100W	MG RESISTOR	10Ω 1/16W J	
R2601	NRSA6AJ-182W	MG RESISTOR	1.8kΩ 1/16W J	
R2602	NRSA6AJ-182W	MG RESISTOR	1.8kΩ 1/16W J	
R2607	NRSA6AJ-222W	MG RESISTOR	2.2kΩ 1/16W J	
R2608	NRSA6AJ-222W	MG RESISTOR	2.2kΩ 1/16W J	
R2609	NRSA6AJ-223W	MG RESISTOR	22kΩ 1/16W J	
R2610	NRSA6AJ-223W	MG RESISTOR	22kΩ 1/16W J	
R3002	NRSA6AJ-103W	MG RESISTOR	10kΩ 1/16W J	
R3004	NRSA6AJ-103W	MG RESISTOR	10kΩ 1/16W J	
R3005	NRSA6AJ-100W	MG RESISTOR	10Ω 1/16W J	
R3006	NRSA6AJ-100W	MG RESISTOR	10Ω 1/16W J	
R3007	NRSA6AJ-562W	MG RESISTOR	5.6kΩ 1/16W J	
R3008	NRSA6AJ-222W	MG RESISTOR	2.2kΩ 1/16W J	
R3009	NRSA6AJ-103W	MG RESISTOR	10kΩ 1/16W J	
R3010	NRSA6AJ-103W	MG RESISTOR	10kΩ 1/16W J	
R3011	NRSA6AJ-224W	MG RESISTOR	220kΩ 1/16W J	
R3013	NRSA6AJ-242W	MG RESISTOR	2.4kΩ 1/16W J	
R3014	NRSA6AJ-392W	MG RESISTOR	3.9kΩ 1/16W J	
R3015	NRSA6AJ-392W	MG RESISTOR	3.9kΩ 1/16W J	
R3016	NRVA6AD-560W	CMF RESISTOR	56Ω 1/16W D	
R3017	NRVA6AD-560W	CMF RESISTOR	56Ω 1/16W D	
R3018	NRVA6AD-560W	CMF RESISTOR	56Ω 1/16W D	
R3019	NRVA6AD-560W	CMF RESISTOR	56Ω 1/16W D	
R3020	NRVA6AD-512W	CMF RESISTOR	5.1kΩ 1/16W D	
R3021	NRSA6AJ-0R0W	MG RESISTOR	0Ω 1/16W J	
R3025	NRSA6AJ-102W	MG RESISTOR	1kΩ 1/16W J	
R3027	NRSA6AJ-103W	MG RESISTOR	10kΩ 1/16W J	
R3029	NRSA6AJ-822W	MG RESISTOR	8.2kΩ 1/16W J	
R3030	NRSA6AJ-224W	MG RESISTOR	220kΩ 1/16W J	
R3031	NRSA6AJ-224W	MG RESISTOR	220kΩ 1/16W J	
R3032	NRSA6AJ-105W	MG RESISTOR	1MΩ 1/16W J	
R3034	NRSA6AJ-222W	MG RESISTOR	2.2kΩ 1/16W J	
R3036	NRSA6AJ-103W	MG RESISTOR	10kΩ 1/16W J	
R3037	NRSA6AJ-681W	MG RESISTOR	680Ω 1/16W J	
R3057	NRSA6AJ-151W	MG RESISTOR	150Ω 1/16W J	
R3066	NRSA6AJ-561W	MG RESISTOR	560Ω 1/16W J	
R3067	NRSA6AJ-561W	MG RESISTOR	560Ω 1/16W J	
R3068	NRSA6AJ-181W	MG RESISTOR	180Ω 1/16W J	
R3069	NRSA6AJ-472W	MG RESISTOR	4.7kΩ 1/16W J	
R3071	NRSA6AJ-0R0W	MG RESISTOR	0Ω 1/16W J	
R3074	NRSA6AJ-103W	MG RESISTOR	10kΩ 1/16W J	
R3082	NRSA6AJ-0R0W	MG RESISTOR	0Ω 1/16W J	
R3701	NRSA6AD-271W	MG RESISTOR	270Ω 1/16W D	
R3702	NRSA6AD-271W	MG RESISTOR	270Ω 1/16W D	
R3703	NRSA6AJ-332W	MG RESISTOR	3.3kΩ 1/16W J	
R3704	NRSA6AD-301W	MG RESISTOR	300Ω 1/16W D	
R3705	NRSA6AD-301W	MG RESISTOR	300Ω 1/16W D	
R3706	NRSA6AJ-332W	MG RESISTOR	3.3kΩ 1/16W J	
R3707	NRSA6AD-680W	MG RESISTOR	68Ω 1/16W D	
R3708	NRSA6AD-680W	MG RESISTOR	68Ω 1/16W D	
R3709	NRSA6AD-680W	MG RESISTOR	68Ω 1/16W D	
R3710	NRSA6AJ-104W	MG RESISTOR	100kΩ 1/16W J	
R3711	NRSA6AJ-104W	MG RESISTOR	100kΩ 1/16W J	
R3712	NRSA6AJ-105W	MG RESISTOR	1MΩ 1/16W J	
R3713	NRSA6AJ-104W	MG RESISTOR	100kΩ 1/16W J	
R3714	NRSA6AJ-823W	MG RESISTOR	82kΩ 1/16W J	
R3715	NRSA6AJ-103W	MG RESISTOR	10kΩ 1/16W J	
R3722	NRSA6AD-131W	MG RESISTOR	130Ω 1/16W D	
R3724	NRSA6AJ-472W	MG RESISTOR	4.7kΩ 1/16W J	

MODEL	MARK	MODEL	MARK
GR-D70EK	A	GR-D70EY	C
GR-D70EX	B	GR-D70EZ	D

⚠ Symbol No.	Part No.	Part Name	Description	Local
R3725	NRSA6AD-131W	MG RESISTOR	130Ω 1/16W D	
R3726	NRSA6AJ-472W	MG RESISTOR	4.7kΩ 1/16W J	
R3727	NRSA6AJ-472W	MG RESISTOR	4.7kΩ 1/16W J	
R3728	NRSA6AD-131W	MG RESISTOR	130Ω 1/16W D	
R3730	NRSA6AJ-472W	MG RESISTOR	4.7kΩ 1/16W J	
R3731	NRSA6AJ-472W	MG RESISTOR	4.7kΩ 1/16W J	
R3732	NRSA6AJ-101W	MG RESISTOR	100Ω 1/16W J	
R3733	NRSA6AD-561W	MG RESISTOR	560Ω 1/16W D	
R3734	NRSA6AJ-822W	MG RESISTOR	8.2kΩ 1/16W J	
R3735	NRSA6AD-182W	MG RESISTOR	1.8kΩ 1/16W D	
R3736	NRSA6AJ-183W	MG RESISTOR	18kΩ 1/16W J	
R3737	NRSA6AJ-183W	MG RESISTOR	18kΩ 1/16W J	
R3738	NRSA6AJ-681W	MG RESISTOR	680Ω 1/16W J	
R3739	NRSA6AJ-821W	MG RESISTOR	820Ω 1/16W J	
R3740	NRSA6AJ-821W	MG RESISTOR	820Ω 1/16W J	
R3741	NRSA6AJ-102W	MG RESISTOR	1kΩ 1/16W J	
R3742	NRSA6AJ-104W	MG RESISTOR	100kΩ 1/16W J	
R3743	NRSA6AJ-104W	MG RESISTOR	100kΩ 1/16W J	
R3744	NRSA6AD-561W	MG RESISTOR	560Ω 1/16W D	
R3745	NRSA6AD-152W	MG RESISTOR	1.5kΩ 1/16W D	
R3746	NRSA6AJ-222W	MG RESISTOR	2.2kΩ 1/16W J	
R3747	NRSA6AJ-102W	MG RESISTOR	1kΩ 1/16W J	
R3748	NRSA6AJ-474W	MG RESISTOR	470kΩ 1/16W J	
R3801	NRSA6AJ-101W	MG RESISTOR	100Ω 1/16W J	
R3802	NRSA6AD-821W	MG RESISTOR	820Ω 1/16W D	
R3803	NRSA6AD-273W	MG RESISTOR	27kΩ 1/16W D	
R3804	NRSA6AD-153W	MG RESISTOR	15kΩ 1/16W D	
R3805	NRSA6AD-821W	MG RESISTOR	820Ω 1/16W D	
R3807	NRSA6AJ-220W	MG RESISTOR	22Ω 1/16W J	
R4201	NRSA6AJ-333W	MG RESISTOR	33kΩ 1/16W J	
R4202	NRSA6AJ-0R0W	MG RESISTOR	0Ω 1/16W J	
R4203	NRSA6AJ-0R0W	MG RESISTOR	0Ω 1/16W J	
R4204	NRSA6AJ-220W	MG RESISTOR	22Ω 1/16W J	
R4205	NRSA6AJ-220W	MG RESISTOR	22Ω 1/16W J	
R4301	NRSA6AJ-220W	MG RESISTOR	22Ω 1/16W J	
R4303	NRSA6AJ-0R0W	MG RESISTOR	0Ω 1/16W J	
R4304	NRSA6AJ-0R0W	MG RESISTOR	0Ω 1/16W J	
R4306	NRSA6AJ-0R0W	MG RESISTOR	0Ω 1/16W J	
R4307	NRSA6AJ-470W	MG RESISTOR	47Ω 1/16W J	
R4308	NRSA6AJ-470W	MG RESISTOR	47Ω 1/16W J	
R4309	NRSA6AJ-0R0W	MG RESISTOR	0Ω 1/16W J	
R4310	NRSA6AJ-0R0W	MG RESISTOR	0Ω 1/16W J	
R4315	NRSA6AJ-0R0W	MG RESISTOR	0Ω 1/16W J	
R4317	NRSA6AJ-0R0W	MG RESISTOR	0Ω 1/16W J	
R4319	NRSA6AJ-0R0W	MG RESISTOR	0Ω 1/16W J	
R4321	NRSA6AJ-0R0W	MG RESISTOR	0Ω 1/16W J	
R4326	NRSA6AJ-470W	MG RESISTOR	47Ω 1/16W J	
R4327	NRSA6AJ-0R0W	MG RESISTOR	0Ω 1/16W J	
R4328	NRSA6AJ-0R0W	MG RESISTOR	0Ω 1/16W J	
R4329	NRSA6AJ-0R0W	MG RESISTOR	0Ω 1/16W J	
R4330	NRSA6AJ-0R0W	MG RESISTOR	0Ω 1/16W J	
R4331	NRSA6AJ-0R0W	MG RESISTOR	0Ω 1/16W J	
R4332	NRSA6AJ-0R0W	MG RESISTOR	0Ω 1/16W J	
R4333	NRSA6AJ-0R0W	MG RESISTOR	0Ω 1/16W J	
R4334	NRSA6AJ-0R0W	MG RESISTOR	0Ω 1/16W J	
R4335	NRSA6AJ-0R0W	MG RESISTOR	0Ω 1/16W J	
R4336	NRSA6AJ-0R0W	MG RESISTOR	0Ω 1/16W J	
R4337	NRSA6AJ-0R0W	MG RESISTOR	0Ω 1/16W J	
R4338	NRSA6AJ-220W	MG RESISTOR	22Ω 1/16W J	
R4339	NRSA6AJ-0R0W	MG RESISTOR	0Ω 1/16W J	
R4341	NRSA6AJ-0R0W	MG RESISTOR	0Ω 1/16W J	
R4342	NRSA6AJ-0R0W	MG RESISTOR	0Ω 1/16W J	
R4343	NRSA6AJ-0R0W	MG RESISTOR	0Ω 1/16W J	
R4344	NRSA6AJ-0R0W	MG RESISTOR	0Ω 1/16W J	
R4345	NRSA6AJ-220W	MG RESISTOR	22Ω 1/16W J	
R4346	NRSA6AJ-220W	MG RESISTOR	22Ω 1/16W J	
R4348	NRSA6AJ-0R0W	MG RESISTOR	0Ω 1/16W J	
R4349	NRSA6AJ-0R0W	MG RESISTOR	0Ω 1/16W J	
R4350	NRSA6AJ-0R0W	MG RESISTOR	0Ω 1/16W J	
R4351	NRSA6AJ-0R0W	MG RESISTOR	0Ω 1/16W J	
R4352	NRSA6AJ-0R0W	MG RESISTOR	0Ω 1/16W J	
R4353	NRSA6AJ-0R0W	MG RESISTOR	0Ω 1/16W J	
R4354	NRSA6AJ-0R0W	MG RESISTOR	0Ω 1/16W J	
R4355	NRSA6AJ-0R0W	MG RESISTOR	0Ω 1/16W J	
R4356	NRSA6AJ-0R0W	MG RESISTOR	0Ω 1/16W J	
R4804	NRSA6AJ-102W	MG RESISTOR	1kΩ 1/16W J	
R4805	NRSA6AJ-103W	MG RESISTOR	10kΩ 1/16W J	
R4806	NRSA6AJ-683W	MG RESISTOR	68kΩ 1/16W J	

⚠ Symbol No.	Part No.	Part Name	Description	Local
R4807	NRSA6AJ-823W	MG RESISTOR	82kΩ 1/16W J	
R4808	NRSA6AJ-243W	MG RESISTOR	24kΩ 1/16W J	
R4809	NRSA6AJ-681W	MG RESISTOR	680Ω 1/16W J	
R4810	NRSA6AJ-103W	MG RESISTOR	10kΩ 1/16W J	
R4811	NRSA6AJ-824W	MG RESISTOR	820kΩ 1/16W J	
R4812	NRSA6AJ-153W	MG RESISTOR	15kΩ 1/16W J	
R4814	NRSA6AJ-105W	MG RESISTOR	1MΩ 1/16W J	
R4815	NRSA6AJ-472W	MG RESISTOR	4.7kΩ 1/16W J	
R4816	NRSA6AJ-105W	MG RESISTOR	1MΩ 1/16W J	
R4817	NRSA6AJ-334W	MG RESISTOR	330kΩ 1/16W J	
R4818	NRSA6AJ-154W	MG RESISTOR	150kΩ 1/16W J	
R4819	NRSA6AJ-103W	MG RESISTOR	10kΩ 1/16W J	
R4820	NRSA6AJ-104W	MG RESISTOR	100kΩ 1/16W J	
R4821	NRSA6AJ-104W	MG RESISTOR	100kΩ 1/16W J	
R4822	NRSA6AJ-333W	MG RESISTOR	33kΩ 1/16W J	
R4823	NRSA6AJ-102W	MG RESISTOR	1kΩ 1/16W J	
R4824	NRSA6AJ-472W	MG RESISTOR	4.7kΩ 1/16W J	
R4825	NRSA6AJ-222W	MG RESISTOR	2.2kΩ 1/16W J	
R4826	NRSA6AJ-473W	MG RESISTOR	47kΩ 1/16W J	
R4827	NRSA6AJ-0R0W	MG RESISTOR	0Ω 1/16W J	
R4828	NRSA6AJ-0R0W	MG RESISTOR	0Ω 1/16W J	
R4833	NRSA6AJ-104W	MG RESISTOR	100kΩ 1/16W J	
R4836	NRSA6AJ-102W	MG RESISTOR	1kΩ 1/16W J	
R4837	NRSA6AJ-0R0W	MG RESISTOR	0Ω 1/16W J	
R4839	NRSA6AJ-0R0W	MG RESISTOR	0Ω 1/16W J	
R4840	NRSA6AJ-0R0W	MG RESISTOR	0Ω 1/16W J	
R4843	NRSA6AJ-0R0W	MG RESISTOR	0Ω 1/16W J	
R4844	NRSA6AJ-151W	MG RESISTOR	150Ω 1/16W J	
R4846	NRSA6AJ-0R0W	MG RESISTOR	0Ω 1/16W J	
R4849	NRSA6AJ-0R0W	MG RESISTOR	0Ω 1/16W J	
R4854	NRSA6AJ-0R0W	MG RESISTOR	0Ω 1/16W J	
R4856	NRSA6AJ-6R8W	MG RESISTOR	6.8Ω 1/16W J	
R4857	NRSA6AJ-6R8W	MG RESISTOR	6.8Ω 1/16W J	
R4858	NRSA6AJ-333W	MG RESISTOR	33kΩ 1/16W J	
R4859	NRSA6AJ-0R0W	MG RESISTOR	0Ω 1/16W J	
R4860	NRSA6AJ-0R0W	MG RESISTOR	0Ω 1/16W J	
R4862	NRSA6AJ-6R8W	MG RESISTOR	6.8Ω 1/16W J	
R4863	NRSA6AJ-6R8W	MG RESISTOR	6.8Ω 1/16W J	
R4864	NRSA6AJ-102W	MG RESISTOR	1kΩ 1/16W J	
R4865	NRSA6AJ-102W	MG RESISTOR	1kΩ 1/16W J	
R4866	NRSA6AJ-102W	MG RESISTOR	1kΩ 1/16W J	
R4867	NRSA6AJ-102W	MG RESISTOR	1kΩ 1/16W J	
R4868	NRSA6AJ-0R0W	MG RESISTOR	0Ω 1/16W J	
R4870	NRSA6AJ-271W	MG RESISTOR	270Ω 1/16W J	
R4871	NRSA6AJ-0R0W	MG RESISTOR	0Ω 1/16W J	
R4874	NRSA6AJ-0R0W	MG RESISTOR	0Ω 1/16W J	
R4875	NRSA6AJ-0R0W	MG RESISTOR	0Ω 1/16W J	
R5501	NRSA6AJ-0R0W	MG RESISTOR	0Ω 1/16W J	
R5503	NRSA6AJ-220W	MG RESISTOR	22Ω 1/16W J	
R5504	NRSA6AJ-220W	MG RESISTOR	22Ω 1/16W J	
R5505	NRSA6AJ-220W	MG RESISTOR	22Ω 1/16W J	
R5506	NRSA6AJ-0R0W	MG RESISTOR	0Ω 1/16W J	
R5507	NRSA6AJ-0R0W	MG RESISTOR	0Ω 1/16W J	
R5509	NRSA6AJ-470W	MG RESISTOR	47Ω 1/16W J	
R5511	NRSA6AJ-470W	MG RESISTOR	47Ω 1/16W J	
R5512	NRSA6AJ-102W	MG RESISTOR	1kΩ 1/16W J	
R5513	NRSA6AJ-102W	MG RESISTOR	1kΩ 1/16W J	
R5514	NRSA6AJ-102W	MG RESISTOR	1kΩ 1/16W J	
R6021	NRSA6AJ-102W	MG RESISTOR	1kΩ 1/16W J	
R6022	NRSA6AJ-102W	MG RESISTOR	1kΩ 1/16W J	
R6023	NRSA6AJ-102W	MG RESISTOR	1kΩ 1/16W J	
R6024	NRSA6AJ-102W	MG RESISTOR	1kΩ 1/16W J	
R6025	NRSA6AJ-0R0W	MG RESISTOR	0Ω 1/16W J	
R6026	NRSA6AJ-0R0W	MG RESISTOR	0Ω 1/16W J	
R6027	NRSA6AD-103W	MG RESISTOR	10kΩ 1/16W D	
R6028	NRSA6AD-751W	MG RESISTOR	750Ω 1/16W D	
R6029	NRSA6AD-103W	MG RESISTOR	10kΩ 1/16W D	
R6030	NRSA6AJ-333W	MG RESISTOR	33kΩ 1/16W J	
R6031	NRSA6AJ-472W	MG RESISTOR	4.7kΩ 1/16W J	
R6033	NRSA6AJ-562W	MG RESISTOR	5.6kΩ 1/16W J	
R6034	NRSA6AJ-153W	MG RESISTOR	15kΩ 1/16W J	
R6035	NRSA6AJ-104W	MG RESISTOR	100kΩ 1/16W J	
R6036	NRSA6AJ-104W	MG RESISTOR	100kΩ 1/16W J	
R6037	NRSA6AD-153W	MG RESISTOR	15kΩ 1/16W D	
R6038	NRSA6AJ-0R0W	MG RESISTOR	0Ω 1/16W J	
R6039	NRSA6AJ-104W	MG RESISTOR	100kΩ 1/16W J	
R6040	NRSA6AJ-103W	MG RESISTOR	10kΩ 1/16W J	
R6042	NRSA63J-0R0X	MG RESISTOR	0Ω 1/16W J	

MODEL	MARK	MODEL	MARK
GR-D70EK	A	GR-D70EY	C
GR-D70EX	B	GR-D70EZ	D

⚠ Symbol No.	Part No.	Part Name	Description	Local
R6044	NRSA6AJ-224W	MG RESISTOR	220kΩ 1/16W J	
R6102	NRVA6AD-223W	CMF RESISTOR	22kΩ 1/16W D	
R6103	NRVA6AD-103W	CMF RESISTOR	10kΩ 1/16W D	
R6104	NRSA6AJ-474W	MG RESISTOR	470kΩ 1/16W J	
R6105	NRSA6AJ-104W	MG RESISTOR	100kΩ 1/16W J	
R6106	NRSA6AJ-332W	MG RESISTOR	3.3kΩ 1/16W J	
R6107	NRSA6AD-183W	MG RESISTOR	18kΩ 1/16W D	
R6108	NRSA6AD-123W	MG RESISTOR	12kΩ 1/16W D	
R6109	NRSA63J-0R0X	MG RESISTOR	0Ω 1/16W J	
R6202	NRSA6AD-123W	MG RESISTOR	12kΩ 1/16W D	
R6203	NRSA6AD-153W	MG RESISTOR	15kΩ 1/16W D	
R6302	NRSA6AD-183W	MG RESISTOR	18kΩ 1/16W D	
R6303	NRSA6AD-472W	MG RESISTOR	4.7kΩ 1/16W D	
R6305	NRSA6AJ-104W	MG RESISTOR	100kΩ 1/16W J	
R6306	NRSA6AJ-123W	MG RESISTOR	12kΩ 1/16W J	
R6308	NRSA6AJ-473W	MG RESISTOR	47kΩ 1/16W J	
R6309	NRSA63J-0R0X	MG RESISTOR	0Ω 1/16W J	
R6402	NRSA6AD-243W	MG RESISTOR	24kΩ 1/16W D	
R6403	NRSA6AD-302W	MG RESISTOR	3kΩ 1/16W D	
R6405	NRSA6AJ-123W	MG RESISTOR	12kΩ 1/16W J	
R6406	NRSA6AJ-103W	MG RESISTOR	10kΩ 1/16W J	
R6407	NRSA6AJ-104W	MG RESISTOR	100kΩ 1/16W J	
R6502	NRSA6AD-473W	MG RESISTOR	47kΩ 1/16W D	
R6503	NRSA6AD-562W	MG RESISTOR	5.6kΩ 1/16W D	
R6505	NRSA6AJ-473W	MG RESISTOR	47kΩ 1/16W J	
R6506	NRSA6AJ-273W	MG RESISTOR	27kΩ 1/16W J	
R6602	NRSA6AD-114W	MG RESISTOR	110kΩ 1/16W D	
R6603	NRSA6AD-392W	MG RESISTOR	3.9kΩ 1/16W D	
R6604	NRSA6AD-114W	MG RESISTOR	110kΩ 1/16W D	
R6605	NRSA6AJ-222W	MG RESISTOR	2.2kΩ 1/16W J	
R6606	NRSA6AD-104W	MG RESISTOR	100kΩ 1/16W D	
R6607	NRSA6AD-473W	MG RESISTOR	47kΩ 1/16W D	
R6608	NRSA6AJ-273W	MG RESISTOR	27kΩ 1/16W J	
R6609	NRSA6AJ-822W	MG RESISTOR	8.2kΩ 1/16W J	
R6610	NRSA6AD-473W	MG RESISTOR	47kΩ 1/16W D	
R6611	NRSA6AD-683W	MG RESISTOR	68kΩ 1/16W D	
R6612	NRSA6AJ-104W	MG RESISTOR	100kΩ 1/16W J	
R6613	NRSA6AJ-823W	MG RESISTOR	82kΩ 1/16W J	
R6614	NRSA6AD-104W	MG RESISTOR	100kΩ 1/16W D	
R6615	NRSA6AD-104W	MG RESISTOR	100kΩ 1/16W D	
R6616	NRSA6AJ-103W	MG RESISTOR	10kΩ 1/16W J	
R6617	NRSA6AJ-333W	MG RESISTOR	33kΩ 1/16W J	
R6618	NRSA6AJ-0R0W	MG RESISTOR	0Ω 1/16W J	
R6619	NRSA63J-0R0X	MG RESISTOR	0Ω 1/16W J	
R6701	NRZ0058-R20X	MG RESISTOR	0.2Ω 1/2W J	
R6702	NRSA6AD-114W	MG RESISTOR	110kΩ 1/16W D	
R6703	NRSA6AD-153W	MG RESISTOR	15kΩ 1/16W D	
R6704	NRSA6AJ-224W	MG RESISTOR	220kΩ 1/16W J	
R6706	NRSA6AD-823W	MG RESISTOR	82kΩ 1/16W D	
R6707	NRSA6AD-333W	MG RESISTOR	33kΩ 1/16W D	
R6801	NRSA6AJ-0R0W	MG RESISTOR	0Ω 1/16W J	
R6803	NRSA6AJ-0R0W	MG RESISTOR	0Ω 1/16W J	
R6804	NRVA6AD-563W	CMF RESISTOR	56kΩ 1/16W D	
⚠ R6805	NRSA6AJ-102W	MG RESISTOR	1kΩ 1/16W J	
R6813	NRVA6AD-273W	CMF RESISTOR	27kΩ 1/16W D	
R6815	NRSA6AJ-681W	MG RESISTOR	680Ω 1/16W J	
R8001	NRSA6AJ-103W	MG RESISTOR	10kΩ 1/16W J	
R8002	NRSA6AJ-103W	MG RESISTOR	10kΩ 1/16W J	
R8003	NRSA6AJ-103W	MG RESISTOR	10kΩ 1/16W J	
R8004	NQL402M-100X	COIL	10uH M	
R8005	NRSA6AJ-0R0W	MG RESISTOR	0Ω 1/16W J	
R8006	NRSA6AJ-153W	MG RESISTOR	15kΩ 1/16W J	
R8007	NRSA6AJ-472W	MG RESISTOR	4.7kΩ 1/16W J	
R8009	NRSA6AJ-472W	MG RESISTOR	4.7kΩ 1/16W J	
R8016	NRSA6AJ-103W	MG RESISTOR	10kΩ 1/16W J	
R8017	NRSA6AJ-103W	MG RESISTOR	10kΩ 1/16W J	
R8022	NRSA6AJ-105W	MG RESISTOR	1MΩ 1/16W J	
R8025	NRSA6AJ-0R0W	MG RESISTOR	0Ω 1/16W J	
R8026	NRSA6AJ-0R0W	MG RESISTOR	0Ω 1/16W J	
R8030	NRSA6AJ-0R0W	MG RESISTOR	0Ω 1/16W J	
R8031	NRSA6AJ-0R0W	MG RESISTOR	0Ω 1/16W J	
R8032	NRSA6AJ-0R0W	MG RESISTOR	0Ω 1/16W J	
R8037	NRSA6AJ-103W	MG RESISTOR	10kΩ 1/16W J	
R8038	NRSA6AJ-0R0W	MG RESISTOR	0Ω 1/16W J	
R8043	NRSA6AJ-0R0W	MG RESISTOR	0Ω 1/16W J	
R8046	NRSA6AJ-0R0W	MG RESISTOR	0Ω 1/16W J	
R8051	NRSA6AJ-0R0W	MG RESISTOR	0Ω 1/16W J	
R8054	NRSA6AJ-0R0W	MG RESISTOR	0Ω 1/16W J	

⚠ Symbol No.	Part No.	Part Name	Description	Local
R8055	NRSA6AJ-0R0W	MG RESISTOR	0Ω 1/16W J	
R8056	NRSA6AJ-0R0W	MG RESISTOR	0Ω 1/16W J	
R8058	NRSA6AJ-0R0W	MG RESISTOR	0Ω 1/16W J	
R8059	NRSA6AJ-473W	MG RESISTOR	47kΩ 1/16W J	
R8063	NRSA6AJ-220W	MG RESISTOR	22Ω 1/16W J	
R8065	NRSA6AJ-101W	MG RESISTOR	100Ω 1/16W J	
R8066	NRSA6AJ-473W	MG RESISTOR	47kΩ 1/16W J	
R8067	NDCA1HJ-100W	C CAPACITOR	10pF 50V J	
R8068	NRSA6AJ-561W	MG RESISTOR	560Ω 1/16W J	
R8070	NRSA6AJ-220W	MG RESISTOR	22Ω 1/16W J	
R8074	NRSA6AJ-473W	MG RESISTOR	47kΩ 1/16W J	
R8075	NRSA6AJ-102W	MG RESISTOR	1kΩ 1/16W J	
R8302	NRS181J-220X	MG RESISTOR	22Ω 1/8W J	
R8303	NRS181J-220X	MG RESISTOR	22Ω 1/8W J	
R8305	NRSA6AJ-105W	MG RESISTOR	1MΩ 1/16W J	
R8306	NRSA6AJ-103W	MG RESISTOR	10kΩ 1/16W J	
R8307	NRSA6AJ-103W	MG RESISTOR	10kΩ 1/16W J	
R8308	NRSA6AJ-103W	MG RESISTOR	10kΩ 1/16W J	
R8309	NRSA6AJ-103W	MG RESISTOR	10kΩ 1/16W J	
R8311	NRSA6AJ-0R0W	MG RESISTOR	0Ω 1/16W J	
R8312	NRSA6AJ-0R0W	MG RESISTOR	0Ω 1/16W J	
R8716	NRSA6AJ-0R0W	MG RESISTOR	0Ω 1/16W J	
R8717	NRSA6AJ-0R0W	MG RESISTOR	0Ω 1/16W J	
RA1001	NRZ0034-473W	NET RESISTOR	47kΩ 1/32W J	
RA1002	NRZ0034-104W	NET RESISTOR	100kΩ 1/32W J	
RA1004	NRZ0034-104W	NET RESISTOR	100kΩ 1/32W J	
RA1005	NRZ0034-103W	NET RESISTOR	10kΩ 1/32W J	
RA1006	NRZ0034-102W	NET RESISTOR	1kΩ 1/32W J	
RA1007	NRZ0034-102W	NET RESISTOR	1kΩ 1/32W J	
RA1008	NRZ0034-104W	NET RESISTOR	100kΩ 1/32W J	
RA3001	NRZ0034-560W	NET RESISTOR	56Ω 1/32W J	
RA3002	NRZ0034-560W	NET RESISTOR	56Ω 1/32W J	
RA3003	NRZ0034-100W	NET RESISTOR	10Ω 1/32W J	
RA3004	NRZ0034-103W	NET RESISTOR	10kΩ 1/32W J	
RA3005	NRZ0040-0R0X	NET RESISTOR	0Ω 1/16W J	
RA8001	NRZ0034-101W	NET RESISTOR	100Ω 1/32W J	
RA8002	NRZ0034-101W	NET RESISTOR	100Ω 1/32W J	
RA8003	NRZ0034-101W	NET RESISTOR	100Ω 1/32W J	
RA8004	NRZ0034-101W	NET RESISTOR	100Ω 1/32W J	
L1001	NQL402M-100X	COIL	10uH M	
L1002	NQL402M-100X	COIL	10uH M	
L2101	NQL315K-100X	COIL	10uH K	
L2401	NQL402M-100X	COIL	10uH M	
L2402	NQL402M-100X	COIL	10uH M	
L2604	NRSA63J-0R0X	MG RESISTOR	0Ω 1/16W J	
L3001	NQR0129-002X	FERRITE BEADS		
L3002	NQR0129-002X	FERRITE BEADS		
L3004	NQR0006-001X	FERRITE BEADS		
L3005	NQR0006-001X	FERRITE BEADS		
L3007	NQL085J-2R2X	COIL	2.2uH J	
L3008	NQL085J-120X	COIL	12uH J	
L3012	NQR0129-002X	FERRITE BEADS		
L3014	NQL38DK-100X	P COIL	10uH K	
L3015	NQR0006-001X	FERRITE BEADS		
L3701	NQL38DK-100X	P COIL	10uH K	
L3731	NQL085J-6R8X	COIL	6.8uH J	
L3732	NQL085J-6R8X	COIL	6.8uH J	
L3801	NQR0129-002X	FERRITE BEADS		
L3802	NQR0129-002X	FERRITE BEADS		
L3803	NQR0006-001X	FERRITE BEADS		
L3804	NQL38DK-100X	P COIL	10uH K	
L4201	NQR0129-002X	FERRITE BEADS		
L4301	NQR0129-002X	FERRITE BEADS		
L4302	NQR0129-002X	FERRITE BEADS		
L4802	NQL302N-100X	COIL	10uH N	
L4851	NQR0129-002X	FERRITE BEADS		
L4852	NQL315K-100X	COIL	10uH K	
L4853	NQL315K-100X	COIL	10uH K	
L5501	NQL315K-100X	COIL	10uH K	
L5502	NQR0129-002X	FERRITE BEADS		
L5503	NQR0129-002X	FERRITE BEADS		
L5504	NQR0129-002X	FERRITE BEADS		
L5505	NQL315K-100X	COIL	10uH K	
L5506	NQL315K-100X	COIL	10uH K	
L6001	NQLZ011-4R7X	COIL	4.7uH N	
L6002	NQLZ011-4R7X	COIL	4.7uH N	
L6101	NQL52EM-390X	COIL	39uH M	

MODEL	MARK	MODEL	MARK
GR-D70EK	A	GR-D70EY	C
GR-D70EX	B	GR-D70EZ	D

⚠ Symbol No.	Part No.	Part Name	Description	Local
L6201	NQL52EM-390X	COIL	39uH M	
L6301	NQL52EM-390X	COIL	39uH M	
L6302	NQL144K-220X	P COIL	22uH K	
L6401	NQL52EM-470X	COIL	47uH M	
L6501	NQL52EM-470X	COIL	47uH M	
L6601	NQL52EM-221X	COIL	220uH M	
L6701	NQL73EM-100X	COIL	10uH M	
L6801	NQL034K-470X	P COIL	47uH K	
L8001	NQR0129-002X	FERRITE BEADS		
L8002	NQR0129-002X	FERRITE BEADS		
L8003	NQR0129-002X	FERRITE BEADS		
L8004	NQR0129-002X	FERRITE BEADS		
L8005	NQR0129-002X	FERRITE BEADS		
L8006	NQR0129-002X	FERRITE BEADS		
L8301	NQR0129-002X	FERRITE BEADS		
CN101	QGF0528F1-40X	CONNECTOR	FFC/FPC (1-40)	
CN102	QGF0505F1-22X	CONNECTOR	FFC/FPC (1-22)	
CN103	QGF0507F3-10X	CONNECTOR	FFC/FPC (1-10)	
CN104	QGA1002C1-11X	CONNECTOR	W-B (1-11)	
CN105	QGB0509M1-30X	CONNECTOR	B-B (1-30)	
CN106	QGA1201C2-05X	CONNECTOR	W-B (1-5)	
CN107	QGF0503C1-20X	CONNECTOR	FFC/FPC (1-20)	
CN108	QGF0503C1-24V	CONNECTOR	FFC/FPC (1-24)	
CN109	QGF0503F1-16X	CONNECTOR	FFC/FPC (1-16)	
CN110	QGF0528F1-40X	CONNECTOR	FFC/FPC (1-40)	
CN111	QGF0528F1-40X	CONNECTOR	FFC/FPC (1-40)	
⚠ F6001	NMFZ007-2R0X-K	FUSE	2A 32V	
⚠ F6301	NMFZ007-1R25X-K	FUSE	1.25A 32V	
⚠ F6701	NMFZ007-1R25X-K	FUSE	1.25A 32V	
⚠ F6801	NMFZ007-R50X-K	FUSE	0.5A 50V	
J501	NNZ0041-001X	D CONNECTOR	IEEE1394(4pin)	
J502	QNZ0616-001	USB CONNECTOR		
X1001	NAX0578-001X	CRYSTAL		
X1002	NAX0564-001X	CRYSTAL		
X3002	NAX0480-001X	CRYSTAL	24.576MHz	
X5501	NAX0587-001X	CXO		
X8301	NAX0522-001X	C RESONATOR	6.000MHz	
OT1	LY30030-071A	SPACER(A)		
OT2	LY44158-001A	SHEET(SHIELD)		
WR1	QAL0474-001	FPC	MAIN-PREMDA CN401	
WR2	QAL0474-001	FPC	MAIN-PREMDA CN408	

MONI-BW BOARD ASSEMBLY <02>

⚠ Symbol No.	Part No.	Part Name	Description	Local
PW1	YB10433F-01	MONI-BW BOARD ASSY		
IC7601	AN12550A	IC		
IC7602	BA4558F-X	IC		
Q7601	2SC4617/QR/-X	TRANSISTOR		
Q7601	or 2SC4738/YG/-X	TRANSISTOR		
Q7601	or 2SD2216J/QR/-X	TRANSISTOR		
Q7601	or BC847BT-X	TRANSISTOR		
Q7602	2SA1774/QR/-X	TRANSISTOR		
Q7602	or 2SA1832/YG/-X	TRANSISTOR		
Q7602	or BC857BT-X	TRANSISTOR		
Q7603	2SC4617/QR/-X	TRANSISTOR		
Q7603	or 2SC4738/YG/-X	TRANSISTOR		
Q7603	or 2SD2216J/QR/-X	TRANSISTOR		
Q7603	or BC847BT-X	TRANSISTOR		
Q7604	2SA1774/QR/-X	TRANSISTOR		
Q7604	or 2SA1832/YG/-X	TRANSISTOR		
Q7604	or BC857BT-X	TRANSISTOR		
Q7608	DTC144EE-X	DIGI TRANSISTOR		
Q7608	or UN9213J-X	DIGI TRANSISTOR		
Q7608	or RN1104-X	DIGI TRANSISTOR		
Q7608	or BCR148T-X	DIGI TRANSISTOR		
Q7609	2SC4617/QR/-X	TRANSISTOR		
Q7609	or 2SC4738/YG/-X	TRANSISTOR		
Q7609	or 2SD2216J/QR/-X	TRANSISTOR		
Q7609	or BC847BT-X	TRANSISTOR		
Q7610	DTA114EE-X	DIGI TRANSISTOR		
Q7610	or BCR183T-X	DIGI TRANSISTOR		
Q7611	DTC144EE-X	DIGI TRANSISTOR		
Q7611	or UN9213J-X	DIGI TRANSISTOR		
Q7611	or RN1104-X	DIGI TRANSISTOR		
Q7611	or BCR148T-X	DIGI TRANSISTOR		
Q7612	DTA144EE-X	DIGI TRANSISTOR		
Q7612	or UN9113J-X	DIGI TRANSISTOR		
Q7612	or RN2104-X	DIGI TRANSISTOR		
Q7612	or BCR198T-X	DIGI TRANSISTOR		
Q7613	2SD2654/VW/-X	TRANSISTOR		
D11	RSA6.1J4-W	SI DIODE		
D7602	1SS355-X	SI DIODE		
C1	NCB31EK-103X	C CAPACITOR	0.01uF 25V K	
C10	NCB31CK-104X	C CAPACITOR	0.1uF 16V K	
C11	NBE20JM-106X	TA E CAPACITOR	10uF 6.3V M	
C7601	NCB21CK-105X	C CAPACITOR	1uF 16V K	
C7602	NCB31EK-103X	C CAPACITOR	0.01uF 25V K	
C7603	NCB11CK-225X	C CAPACITOR	2.2uF 16V K	
C7604	NCB11CK-225X	C CAPACITOR	2.2uF 16V K	
C7605	NCB11CK-225X	C CAPACITOR	2.2uF 16V K	
C7606	NCB31CK-104X	C CAPACITOR	0.1uF 16V K	
C7607	NCB41CK-106X	C CAPACITOR	10uF 16V K	
C7608	NCB31EK-103X	C CAPACITOR	0.01uF 25V K	
C7609	NCB31CK-104X	C CAPACITOR	0.1uF 16V K	
C7613	NCB11CK-225X	C CAPACITOR	2.2uF 16V K	
C7614	NCB31HK-152X	C CAPACITOR	1500pF 50V K	
C7615	NCB31EK-103X	C CAPACITOR	0.01uF 25V K	
C7616	NCB31EK-103X	C CAPACITOR	0.01uF 25V K	
C7617	NCB31EK-103X	C CAPACITOR	0.01uF 25V K	
C7618	NCB10JK-106X	C CAPACITOR	10uF 6.3V K	
C7619	NCB10JK-106X	C CAPACITOR	10uF 6.3V K	
C7620	NCB31EK-103X	C CAPACITOR	0.01uF 25V K	
C7621	NCB21CK-105X	C CAPACITOR	1uF 16V K	
C7622	NCB21CK-105X	C CAPACITOR	1uF 16V K	
C7623	NBE21AM-106X	TA E CAPACITOR	10uF 10V M	
C7624	NCB31EK-103X	C CAPACITOR	0.01uF 25V K	
C7626	NCB31CK-104X	C CAPACITOR	0.1uF 16V K	
C7627	NCF31CZ-104X	C CAPACITOR	0.1uF 16V Z	
C7628	NBP41EM-475X	TA E CAPACITOR	4.7uF 25V M	
C7629	NBP21CM-335X	TA E CAPACITOR	3.3uF 16V M	
C7630	NBP41EM-475X	TA E CAPACITOR	4.7uF 25V M	
C7631	NCB31EK-103X	C CAPACITOR	0.01uF 25V K	
C7632	NBP41EM-475X	TA E CAPACITOR	4.7uF 25V M	
C7633	NCB31EK-103X	C CAPACITOR	0.01uF 25V K	
C7634	NCB11CK-225X	C CAPACITOR	2.2uF 16V K	
C7635	NCB31EK-103X	C CAPACITOR	0.01uF 25V K	
C7637	NCB31EK-103X	C CAPACITOR	0.01uF 25V K	
C7646	NCB31EK-103X	C CAPACITOR	0.01uF 25V K	
C7647	NCB31EK-103X	C CAPACITOR	0.01uF 25V K	
C7651	NCB11CK-225X	C CAPACITOR	2.2uF 16V K	
C7661	NCB31CK-104X	C CAPACITOR	0.1uF 16V K	
C7662	NCB31CK-104X	C CAPACITOR	0.1uF 16V K	
C7663	NCB31CK-104X	C CAPACITOR	0.1uF 16V K	
C7664	NCB31CK-104X	C CAPACITOR	0.1uF 16V K	
C7665	NBP41CM-226X	TA E CAPACITOR	22uF 16V M	
C7666	NCB31CK-104X	C CAPACITOR	0.1uF 16V K	
R3	NRSA63J-103X	MG RESISTOR	10kΩ 1/16W J	
R4	NRSA63J-332X	MG RESISTOR	3.3kΩ 1/16W J	
R5	NRSA63J-682X	MG RESISTOR	6.8kΩ 1/16W J	
R6	NRSA63J-223X	MG RESISTOR	22kΩ 1/16W J	
R7	NRSA63J-103X	MG RESISTOR	10kΩ 1/16W J	
R8	NRSA63J-332X	MG RESISTOR	3.3kΩ 1/16W J	
R18	NRSA63J-473X	MG RESISTOR	47kΩ 1/16W J	
R19	NRSA63J-103X	MG RESISTOR	10kΩ 1/16W J	
R21	NRSA63J-103X	MG RESISTOR	10kΩ 1/16W J	
R22	NRSA63J-473X	MG RESISTOR	47kΩ 1/16W J	
R23	NRSA63J-104X	MG RESISTOR	100kΩ 1/16W J	
R25	NRSA63J-473X	MG RESISTOR	47kΩ 1/16W J	
R29	NRSA63J-0R0X	MG RESISTOR	0Ω 1/16W J	
R30	NRSA63J-0R0X	MG RESISTOR	0Ω 1/16W J	
R31	NRSA63J-0R0X	MG RESISTOR	0Ω 1/16W J	
R32	NRSA63J-0R0X	MG RESISTOR	0Ω 1/16W J	
R7601	NRVA63D-622X	CMF RESISTOR	6.2kΩ 1/16W D	
R7602	NRSA63J-153X	MG RESISTOR	15kΩ 1/16W J	
R7603	NRSA63J-683X	MG RESISTOR	68kΩ 1/16W J	

MODEL	MARK	MODEL	MARK
GR-D70EK	A	GR-D70EY	C
GR-D70EX	B	GR-D70EZ	D

⚠ Symbol No.	Part No.	Part Name	Description	Local
R7608	NRSA63J-153X	MG RESISTOR	15kΩ 1/16W J	
R7609	NRVA63D-223X	CMF RESISTOR	22kΩ 1/16W D	
R7610	NRVA63D-433X	CMF RESISTOR	43kΩ 1/16W D	
R7611	NRVA63D-821X	CMF RESISTOR	820Ω 1/16W D	
R7612	NRVA63D-223X	CMF RESISTOR	22kΩ 1/16W D	
R7613	NRVA63D-223X	CMF RESISTOR	22kΩ 1/16W D	
R7614	NRVA63D-223X	CMF RESISTOR	22kΩ 1/16W D	
R7615	NRSA63J-223X	MG RESISTOR	22kΩ 1/16W J	
R7616	NRSA63J-223X	MG RESISTOR	22kΩ 1/16W J	
R7617	NRSA02J-561X	MG RESISTOR	560Ω 1/10W J	
R7618	NRSA02J-561X	MG RESISTOR	560Ω 1/10W J	
R7620	NRSA63J-335X	MG RESISTOR	3.3MΩ 1/16W J	
R7621	NRSA63J-0R0X	MG RESISTOR	0Ω 1/16W J	
R7630	NRSA63J-223X	MG RESISTOR	22kΩ 1/16W J	
R7634	NRSA63J-0R0X	MG RESISTOR	0Ω 1/16W J	
R7636	NRSA63J-101X	MG RESISTOR	100Ω 1/16W J	
R7637	NRSA63J-101X	MG RESISTOR	100Ω 1/16W J	
R7638	NRSA63J-101X	MG RESISTOR	100Ω 1/16W J	
R7661	NRSA63J-0R0X	MG RESISTOR	0Ω 1/16W J	
R7662	NRSA63J-0R0X	MG RESISTOR	0Ω 1/16W J	
R7663	NRSA63J-103X	MG RESISTOR	10kΩ 1/16W J	
R7666	NRSA63J-153X	MG RESISTOR	15kΩ 1/16W J	
R7667	NRVA63D-273X	CMF RESISTOR	27kΩ 1/16W D	
R7668	NRVA63D-273X	CMF RESISTOR	27kΩ 1/16W D	
R7669	NRVA63D-392X	CMF RESISTOR	3.9kΩ 1/16W D	
R7672	NRSA63D-394X	MG RESISTOR	390kΩ 1/16W D	
R7673	NRVA63D-473X	CMF RESISTOR	47kΩ 1/16W D	
R7674	NRVA63D-473X	CMF RESISTOR	47kΩ 1/16W D	
R7675	NRSA63J-274X	MG RESISTOR	270kΩ 1/16W J	
L10	NQR0129-002X	FERRITE BEADS		
L7601	NQL365K-100X	COIL	10uH K	
L7602	NQL365K-470X	COIL	47uH K	
L7603	NQL365K-470X	COIL	47uH K	
L7604	NQL365K-100X	COIL	10uH K	
L7605	NQL365K-100X	COIL	10uH K	
L7607	NQL365K-100X	COIL	10uH K	
CN761	QGF0508F1-40X	CONNECTOR	FFC/FPC (1-40)	
CN762	QGF0508F1-10X	CONNECTOR	FFC/FPC (1-10)	
CN763	QGF0507F3-20X	CONNECTOR	FFC/FPC (1-20)	
CN765	QGF0506F2-32X	CONNECTOR	FFC/FPC (1-32)	
CN766	NNZ0058-001X	SD CARD CONNECTOR		
SW2	NSW0145-001X	TACT SWITCH STOP		
SW3	NSW0145-001X	TACT SWITCH REW		
SW4	NSW0145-001X	TACT SWITCH FF		
SW5	NSW0145-001X	TACT SWITCH PLAY/PAUSE		
SW6	NSW0099-001X	SLIDE SWITCH DSC/VIDEO		
SW7	NSW0145-001X	TACT SWITCH INDEX		
SW8	NSW0145-001X	TACT SWITCH SELECT		
SW7601	NSW0200-001X	LEVER SWITCH MONI SW		
OT1	LY44158-001A	SHEET(SHIELD)		

BL-2.5 BOARD ASSEMBLY <03>

⚠ Symbol No.	Part No.	Part Name	Description	Local
PW1	YB20938A	BL-2.5 BOARD ASSY		
IC7604	DN8797MS-X	IC		
Q7501	2SD1664/QR/-W	TRANSISTOR		
Q7502	2SD1664/QR/-W	TRANSISTOR		
Q7503	DTA144EE-X	DIGI TRANSISTOR		
Q7503 or	UN9113J-X	DIGI TRANSISTOR		
Q7503 or	RN2104-X	DIGI TRANSISTOR		
Q7503 or	BCR198T-X	DIGI TRANSISTOR		
Q7504	DTC144EE-X	DIGI TRANSISTOR		
Q7504 or	UN9213J-X	DIGI TRANSISTOR		
Q7504 or	RN1104-X	DIGI TRANSISTOR		
Q7504 or	BCR148T-X	DIGI TRANSISTOR		
C7501	NCZ1016-120X	C CAPACITOR	12pF 2kV J	
C7502	NCB21EK-273X	C CAPACITOR	0.027uF 25V K	
C7503	NCB31EK-103X	C CAPACITOR	0.01uF 25V K	
C7504	NCB10JK-106X	C CAPACITOR	10uF 6.3V K	
R7501	NRSA63J-102X	MG RESISTOR	1kΩ 1/16W J	
R7502	NRSA63J-102X	MG RESISTOR	1kΩ 1/16W J	
R7503	NRSA63J-102X	MG RESISTOR	1kΩ 1/16W J	
R7504	NRSA63J-0R0X	MG RESISTOR	0Ω 1/16W J	
R7511	NRSA63J-0R0X	MG RESISTOR	0Ω 1/16W J	
R7512	NRSA63J-0R0X	MG RESISTOR	0Ω 1/16W J	
R7513	NRSA63J-0R0X	MG RESISTOR	0Ω 1/16W J	
L7501	NQLZ010-680X	COIL	68uH M	
⚠ T7501	NQS0056-001X	SW TARNSF		
CN7601	QGF0507F3-16X	CONNECTOR	FFC/FPC (1-16)	
CN7602	QGF0507F3-16X	CONNECTOR	FFC/FPC (1-16)	
CN7603	QGF0508F1-24X	CONNECTOR	FFC/FPC (1-24)	
⚠ F7501	NMFZ007-R40X-K	FUSE	0.4A 50V	
WR1	QAL0464-001	FPC		

CCD BOARD ASSEMBLY <04>

⚠ Symbol No.	Part No.	Part Name	Description	Local
PW1	YB10406A-01-SS	CCD BOARD ASSY		
Q5001	2SC3931/CD/-X	TRANSISTOR		
Q5002	2SC4081/QR/-X	TRANSISTOR		
Q5002 or	BC847BW-X	TRANSISTOR		
C5001	NBP41EM-475X	TA E CAPACITOR	4.7uF 25V M	
C5002	NCB31CK-104X	C CAPACITOR	0.1uF 16V K	
C5003	NBE21AM-106X	TA E CAPACITOR	10uF 10V M	
C5004	NCB31CK-104X	C CAPACITOR	0.1uF 16V K	
C5005	NCB31CK-104X	C CAPACITOR	0.1uF 16V K	
C5006	NCB31CK-104X	C CAPACITOR	0.1uF 16V K	
C5007	NCB31EK-222X	C CAPACITOR	2200pF 25V K	
R5001	NRSA63J-472X	MG RESISTOR	4.7kΩ 1/16W J	
R5002	NRSA63J-104X	MG RESISTOR	100kΩ 1/16W J	
R5005	NRS181J-472X	MG RESISTOR	4.7kΩ 1/8W J	
L5001	NQL144K-100X	P COIL	10uH K	
L5002	NQL315K-100X	COIL	10uH K	

PREMDA BOARD ASSEMBLY <05>

⚠ Symbol No.	Part No.	Part Name	Description	Local
PW1	YB10405A-01	PREMDA BOARD ASSY		
IC1601	BD6637KS	IC		
IC1701	LM358DMR2-X	IC		
IC1702	LM393DMR2-X	IC		
IC3501	JCY0132	IC		
IC3502	SN74AHC1G04K-X	IC		
Q1601	UMC3N-W	DIGI TRANSISTOR		
D1602	DAP222-X	DIODE ARRAY		
D1602 or	MA132WA-X	SI DIODE		
D1603	DAP222-X	DIODE ARRAY		
D1603 or	MA132WA-X	SI DIODE		
D1604	DAP222-X	DIODE ARRAY		
D1604 or	MA132WA-X	SI DIODE		
C1601	NCB31EK-103X	C CAPACITOR	0.01uF 25V K	
C1602	NBE20JM-106X	TA E CAPACITOR	10uF 6.3V M	
C1603	NBE20JM-106X	TA E CAPACITOR	10uF 6.3V M	
C1605	NCB31CK-104X	C CAPACITOR	0.1uF 16V K	
C1606	NCB31HK-152X	C CAPACITOR	1500pF 50V K	
C1607	NCB31CK-473X	C CAPACITOR	0.047uF 16V K	

MODEL	MARK	MODEL	MARK
GR-D70EK	A	GR-D70EY	C
GR-D70EX	B	GR-D70EZ	D

⚠ Symbol No.	Part No.	Part Name	Description	Local
C1614	NBE20JM-106X	TA E CAPACITOR	10uF 6.3V M	
C1618	NCB31HK-222X	C CAPACITOR	2200pF 50V K	
C1619	NCB31HK-222X	C CAPACITOR	2200pF 50V K	
C1620	NCB31HK-222X	C CAPACITOR	2200pF 50V K	
C1621	NCB30JK-105X	C CAPACITOR	1uF 6.3V K	
C1622	NCB31CK-223X	C CAPACITOR	0.022uF 16V K	
C1623	NCB31CK-473X	C CAPACITOR	0.047uF 16V K	
C1624	NCB31EK-103X	C CAPACITOR	0.01uF 25V K	
C1625	NCS31HJ-101X	C CAPACITOR	100pF 50V J	
C1626	NCB31HK-822X	C CAPACITOR	8200pF 50V K	
C1627	NCB31HK-822X	C CAPACITOR	8200pF 50V K	
C1628	NCB21CK-224X	C CAPACITOR	0.22uF 16V K	
C1629	NBP41DM-106X	TA E CAPACITOR	10uF 20V M	
C1630	NCB21CK-334X	C CAPACITOR	0.33uF 16V K	
C1632	NBE20JM-106X	TA E CAPACITOR	10uF 6.3V M	
C1633	NCB21CK-474X	C CAPACITOR	0.47uF 16V K	
C1641	NCB21CK-474X	C CAPACITOR	0.47uF 16V K	
C1701	NCB31CK-104X	C CAPACITOR	0.1uF 16V K	
C1702	NCB31CK-104X	C CAPACITOR	0.1uF 16V K	
C3501	NBE20JM-106X	TA E CAPACITOR	10uF 6.3V M	
C3502	NBE20JM-106X	TA E CAPACITOR	10uF 6.3V M	
C3503	NBE20JM-106X	TA E CAPACITOR	10uF 6.3V M	
C3504	NCB31CK-473X	C CAPACITOR	0.047uF 16V K	
C3505	NCB31CK-223X	C CAPACITOR	0.022uF 16V K	
C3506	NCB21AK-105X	C CAPACITOR	1uF 10V K	
C3507	NCB31EK-103X	C CAPACITOR	0.01uF 25V K	
C3508	NCB31EK-103X	C CAPACITOR	0.01uF 25V K	
C3509	NCB31EK-103X	C CAPACITOR	0.01uF 25V K	
C3510	NCB31CK-104X	C CAPACITOR	0.1uF 16V K	
C3511	NCB31EK-103X	C CAPACITOR	0.01uF 25V K	
C3512	NCB31CK-104X	C CAPACITOR	0.1uF 16V K	
C3513	NCB31CK-104X	C CAPACITOR	0.1uF 16V K	
C3514	NCB31CK-473X	C CAPACITOR	0.047uF 16V K	
C3515	NCB31CK-473X	C CAPACITOR	0.047uF 16V K	
C3516	NCB31CK-473X	C CAPACITOR	0.047uF 16V K	
C3517	NCB31EK-103X	C CAPACITOR	0.01uF 25V K	
C3518	NCB31EK-103X	C CAPACITOR	0.01uF 25V K	
C3519	NCB31HK-102X	C CAPACITOR	1000pF 50V K	
C3520	NCB31EK-103X	C CAPACITOR	0.01uF 25V K	
C3521	NCB31CK-104X	C CAPACITOR	0.1uF 16V K	
C3522	NCB20JM-475X	C CAPACITOR	4.7uF 6.3V M	
C3523	NCB31EK-103X	C CAPACITOR	0.01uF 25V K	
C3524	NCB31EK-103X	C CAPACITOR	0.01uF 25V K	
C3525	NCB20JM-475X	C CAPACITOR	4.7uF 6.3V M	
C3526	NCB31EK-103X	C CAPACITOR	0.01uF 25V K	
C3527	NDC31HJ-221X	C CAPACITOR	220pF 50V J	
C3528	NCB31EK-103X	C CAPACITOR	0.01uF 25V K	
R1601	NRSA63J-681X	MG RESISTOR	680Ω 1/16W J	
R1602	NRSA63J-124X	MG RESISTOR	120kΩ 1/16W J	
R1603	NRSA63J-472X	MG RESISTOR	4.7kΩ 1/16W J	
R1604	NRSA63J-104X	MG RESISTOR	100kΩ 1/16W J	
R1610	NRSA63J-471X	MG RESISTOR	470Ω 1/16W J	
R1611	NRSA63J-471X	MG RESISTOR	470Ω 1/16W J	
R1612	NRSA63J-104X	MG RESISTOR	100kΩ 1/16W J	
R1613	NRSA63J-102X	MG RESISTOR	1kΩ 1/16W J	
R1614	NRZ0072-R330X	MG RESISTOR	0.33Ω 1/4W F	
R1616	NRSA63D-332X	MG RESISTOR	3.3kΩ 1/16W D	
R1617	NRZ0072-R330X	MG RESISTOR	0.33Ω 1/4W F	
R1620	NRSA63J-103X	MG RESISTOR	10kΩ 1/16W J	
R1621	NRSA63J-103X	MG RESISTOR	10kΩ 1/16W J	
R1622	NRSA63J-103X	MG RESISTOR	10kΩ 1/16W J	
R1624	NRSA63D-183X	MG RESISTOR	18kΩ 1/16W D	
R1625	NRSA63D-361X	MG RESISTOR	360Ω 1/16W D	
R1629	NRSA63J-564X	MG RESISTOR	560kΩ 1/16W J	
R1630	NRSA63J-0R0X	MG RESISTOR	0Ω 1/16W J	
R1631	NRSA63J-0R0X	MG RESISTOR	0Ω 1/16W J	
R1635	NRSA63J-332X	MG RESISTOR	3.3kΩ 1/16W J	
R1636	NRSA63J-123X	MG RESISTOR	12kΩ 1/16W J	
R1637	NRSA63J-154X	MG RESISTOR	150kΩ 1/16W J	
R1638	NRSA63J-0R0X	MG RESISTOR	0Ω 1/16W J	
R1639	NRSA63J-0R0X	MG RESISTOR	0Ω 1/16W J	
R1640	NRSA63J-0R0X	MG RESISTOR	0Ω 1/16W J	
R1641	NRSA63J-0R0X	MG RESISTOR	0Ω 1/16W J	
R1642	NRSA63J-0R0X	MG RESISTOR	0Ω 1/16W J	
R1648	NRSA63J-0R0X	MG RESISTOR	0Ω 1/16W J	
R1701	NRSA63J-823X	MG RESISTOR	82kΩ 1/16W J	
R1702	NRSA63J-222X	MG RESISTOR	2.2kΩ 1/16W J	

⚠ Symbol No.	Part No.	Part Name	Description	Local
R1703	NRSA63J-222X	MG RESISTOR	2.2kΩ 1/16W J	
R1704	NRSA63J-222X	MG RESISTOR	2.2kΩ 1/16W J	
R1705	NRSA63J-222X	MG RESISTOR	2.2kΩ 1/16W J	
R1706	NRSA63J-823X	MG RESISTOR	82kΩ 1/16W J	
R1707	NRSA63J-103X	MG RESISTOR	10kΩ 1/16W J	
R1708	NRSA63J-124X	MG RESISTOR	120kΩ 1/16W J	
R1709	NRSA63J-103X	MG RESISTOR	10kΩ 1/16W J	
R1710	NRSA63J-124X	MG RESISTOR	120kΩ 1/16W J	
R1711	NRSA63J-102X	MG RESISTOR	1kΩ 1/16W J	
R1712	NRSA63J-102X	MG RESISTOR	1kΩ 1/16W J	
R3501	NRSA63J-471X	MG RESISTOR	470Ω 1/16W J	
R3502	NRSA63J-104X	MG RESISTOR	100kΩ 1/16W J	
R3503	NRSA63J-102X	MG RESISTOR	1kΩ 1/16W J	
R3504	NRSA63D-241X	MG RESISTOR	240Ω 1/16W D	
R3505	NRSA63D-241X	MG RESISTOR	240Ω 1/16W D	
R3506	NRSA63D-241X	MG RESISTOR	240Ω 1/16W D	
R3507	NRSA63D-241X	MG RESISTOR	240Ω 1/16W D	
R3508	NRSA63J-223X	MG RESISTOR	22kΩ 1/16W J	
R3511	NRSA63J-101X	MG RESISTOR	100Ω 1/16W J	
L3501	NQR0006-001X	FERRITE BEADS		
L3502	NQL402M-100X	COIL	10uH M	
L3503	NQR0006-001X	FERRITE BEADS		
L3504	NQR0006-001X	FERRITE BEADS		
L3505	NQR0006-001X	FERRITE BEADS		
CN401	QGF0528F1-40X	CONNECTOR	FFC/FPC (1-40)	
CN402	QGF0517F1-08X	CONNECTOR	FFC/FPC (1-8)	
CN403	QGF0505F2-06X	CONNECTOR	FFC/FPC (1-6)	
CN404	QGF0507F3-11X	CONNECTOR	FFC/FPC (1-11)	
CN405	QGF0507F3-18X	CONNECTOR	FFC/FPC (1-18)	
CN406	QGF0503F4-16X	CONNECTOR	FFC/FPC (1-16)	
CN407	QGF0508F1-06X	CONNECTOR	FFC/FPC (1-6)	
CN408	QGF0528F1-40X	CONNECTOR	FFC/FPC (1-40)	
⚠ F1601	NMFZ007-R20X-K	FUSE	0.2A 50V	
⚠ F1602	NMFZ007-R50X-K	FUSE	0.5A 50V	
OT1	LY33021-001A	S.COVER(P/R)		

JACK BOARD ASSEMBLY <06>

⚠ Symbol No.	Part No.	Part Name	Description	Local
PW1	YB20943B-01	JACK BOARD ASSY		
IC501	BA10358F-XE	IC		
IC502	RPM7138-V4	IR DETECT UNIT		
Q501	RPM-22PB	PHOTO TRANSISTOR		
D501	SML-010LT-X	LED		
D503	MA8068-X	Z DIODE		
D506	MA8068-X	Z DIODE		
D507	EMZ6.8N-X	Z DIODE		
C501	NBE21AM-335X	TA E CAPACITOR	3.3uF 10V M	
C502	NCF31CZ-104X	C CAPACITOR	0.1uF 16V Z	
C503	NCB31EK-153X	C CAPACITOR	0.015uF 25V K	
C504	NCB31EK-153X	C CAPACITOR	0.015uF 25V K	
C506	NBE21AM-106X	TA E CAPACITOR	10uF 10V M	
C509	NBE20JM-226X	TA E CAPACITOR	22uF 6.3V M	
C512	NCB31HK-103X	C CAPACITOR	0.01uF 50V K	
C513	NCB31HK-103X	C CAPACITOR	0.01uF 50V K	
R501	NRSA63J-103X	MG RESISTOR	10kΩ 1/16W J	
R502	NRSA63J-684X	MG RESISTOR	680kΩ 1/16W J	
R503	NRSA63J-182X	MG RESISTOR	1.8kΩ 1/16W J	
R504	NRSA63J-222X	MG RESISTOR	2.2kΩ 1/16W J	
R505	NRSA63J-103X	MG RESISTOR	10kΩ 1/16W J	
R506	NRSA63J-824X	MG RESISTOR	820kΩ 1/16W J	
R507	NRSA63J-104X	MG RESISTOR	100kΩ 1/16W J	
R508	NRSA63J-683X	MG RESISTOR	68kΩ 1/16W J	
R509	NRSA63J-822X	MG RESISTOR	8.2kΩ 1/16W J	
R510	NRSA63J-0R0X	MG RESISTOR	0Ω 1/16W J	
R511	NRSA63J-302X	MG RESISTOR	3kΩ 1/16W J	
R512	NRSA63J-470X	MG RESISTOR	47Ω 1/16W J	

MODEL	MARK	MODEL	MARK
GR-D70EK	A	GR-D70EY	C
GR-D70EX	B	GR-D70EZ	D

⚠ Symbol No.	Part No.	Part Name	Description	Local
R513	NRSA63J-101X	MG RESISTOR	100Ω 1/16W J	
R514	NRSA63J-101X	MG RESISTOR	100Ω 1/16W J	
R515	NRSA63J-0R0X	MG RESISTOR	0Ω 1/16W J	
R516	NRSA63J-0R0X	MG RESISTOR	0Ω 1/16W J	
R517	NRSA63J-0R0X	MG RESISTOR	0Ω 1/16W J	
R518	NRSA63J-0R0X	MG RESISTOR	0Ω 1/16W J	
R519	NRSA63J-0R0X	MG RESISTOR	0Ω 1/16W J	
R520	NRSA63J-0R0X	MG RESISTOR	0Ω 1/16W J	
R521	NRSA63J-0R0X	MG RESISTOR	0Ω 1/16W J	
R522	NRSA63J-221X	MG RESISTOR	220Ω 1/16W J	
R523	NRSA63J-331X	MG RESISTOR	330Ω 1/16W J	
L501	NQR0251-004X	FERRITE BEADS		
L502	NQR0251-004X	FERRITE BEADS		
L503	NQR0251-004X	FERRITE BEADS		
CN501	QGF0503C1-22X	CONNECTOR	FFC/FPC (1-22)	
J501	QNS0078-001	3.5 JACK		
J502	QND0004-001	S JACK		
J503	PEMC1203	MINI JACK		
SW501	NSW0122-001X	DETECT SWITCH EJECT SW		

B/W-VF BOARD ASSEMBLY <07>

⚠ Symbol No.	Part No.	Part Name	Description	Local
PW1	YB20940A	B/W-VF BOARD ASSY		
Q7001	PUMX1-W	PAIR TRANSISTOR		
Q7001 or	BC847S-X	PAIR TRANSISTOR		
D7001	E1S35AW0C501-X	LED		
C7001	NCB31CK-104X	C CAPACITOR	0.1uF 16V K	
C7002	NCB31CK-104X	C CAPACITOR	0.1uF 16V K	
C7003	NCB31CK-104X	C CAPACITOR	0.1uF 16V K	
C7004	NCB31CK-104X	C CAPACITOR	0.1uF 16V K	
R7001	NRSA63J-332X	MG RESISTOR	3.3kΩ 1/16W J	
R7002	NRSA63J-561X	MG RESISTOR	560Ω 1/16W J	
R7003	NRSA63J-470X	MG RESISTOR	47Ω 1/16W J	
R7004	NRSA63J-102X	MG RESISTOR	1kΩ 1/16W J	
CN7001	QGF0532F1-18X	CONNECTOR	FFC/FPC (1-18)	
CN7002	QGF0507F3-20X	CONNECTOR	FFC/FPC (1-20)	